Estimation Instream Flow Incremental Methodology (IFIM)

Lee, Joo Heon
Associate Professor, Department of Civil Engineering, Joongbu University, Geumsan Korea

Jeong, Sang Man
Professor, Department of Civil & Environmental Engineering, Kongju National University Kongju Korea

Lee, Myung Ho
Graduate Student of Civil Engineering, Joongbu University, 312-702, Geumsan Korea

Lee, Soo Yong
Director of Water Resources Division, Dohwa Consulting Engineers Co, Seoul Korea

Lee, Eun Tae
Professor, College of Architecture & Civil Engineering, Kyung Hee University, Yongin, Korea

ABSTRACT: The goal of this project is to estimate the instream flow of the Han River Basin to ensure the adequate supply of suitable quality water for preservation and enhancement of aquatic ecosystems. A applied model is Physical Habitant Simulation System(PHABSIM) of Instream Flow Incremental Methodology(IFIM). The parameters which are needed to simulation by PHABSIM such as flow depth, velocity distribution and channel cover with cross section data are obtained by field survey.
The Habitat Suitability Criteria with the application of univariate curve on Zacco platypus as a target species was able to be established by conducting the field investigation. The estimated results of ecological recommended instream flow by this study has important meanings that the future river management have to seriously take into account for the natural environment and functions of river system.

1 INTRODUCTION

Instream flow resources are a significant part of the overall information needed to develop a comprehensive watershed plan. Also instream flows represent an integral part of the ecological balance that must be preserved when developing various types of watershed management plans. Instream flow resources provide the water required to support beneficial uses such as fish and wildlife habitat and propagation, pollutant load assimilation, navigation, recreation and agriculture.
In Korea, the past assessment of minimum instream flow for ecosystem preservation considered not the specific assessment standard or method but rather the fixed flow such as the low flow peculiar to the river system as a dominant factor, and it was under the circumstance that the satisfaction on the quantitative evaluation of inhabitation environment and the investigation on instream flow were insufficient in Korea. Since especially the fishes that belong to the upper class of food chain in the aquatic ecosystem sensitively responds to water depth and velocity, it is absolutely necessary to ensure the adequate instream flow for fishes in the river. Hence, the application of evaluation methods on fish habitat conditions in the river including hydraulic and water quality conditions which satisfy the inhabitation conditions and the study to estimate

optimum flow by using it have been in progress in various methods to ensure the ecologically recommended instream flow.

The study on the river instream flow for fish habitat preservation was first introduced as a countermeasure to the decrease in the number of salmons in the United States during early 1960s, while the Korea Water Resources Corporation first introduced the concept of aquatic ecosystem to instream flow and estimated the minimum instream flow necessary for the fresh water supply and migration. Kim et al.(1996) and Woo et al.(1998) suggested the passage flow to ensure the water depth and velocity necessary for fish migration in the raffle. In addition, Kim(1999) simulate the hydraulic conditions(water depth and velocity) necessary for the fish habitat supply as a gradually varied flow in the three raffle section: the upper, middle and lower streams of Dal Stream.

This study tried to present the habitat suitability criteria for representative fish species of river fish habit environment in the main stream and the branch of Han River with the univariate curve. The applicability of PHABSIM model of Instream Flow Incremental Methodology was examined by the fish habitat evaluation methods of ecological approaches.

2 STUDY REACHES

The main reach of this study covers whole Han river. The specific section of each stream in this study first selected the points which have high confidence of hydrological data used at the habitat condition simulation with the relatively long-term hydrological observation and are easy to ensure the data.

Based on this consideration and field survey, the sections in each stream had been selected as Table 1. PHABSIM has not been applied to all of selected sections till now. Then the simulation methods were applied and the optimum flow at the breeding and fishing seasons for target fish was calculated.

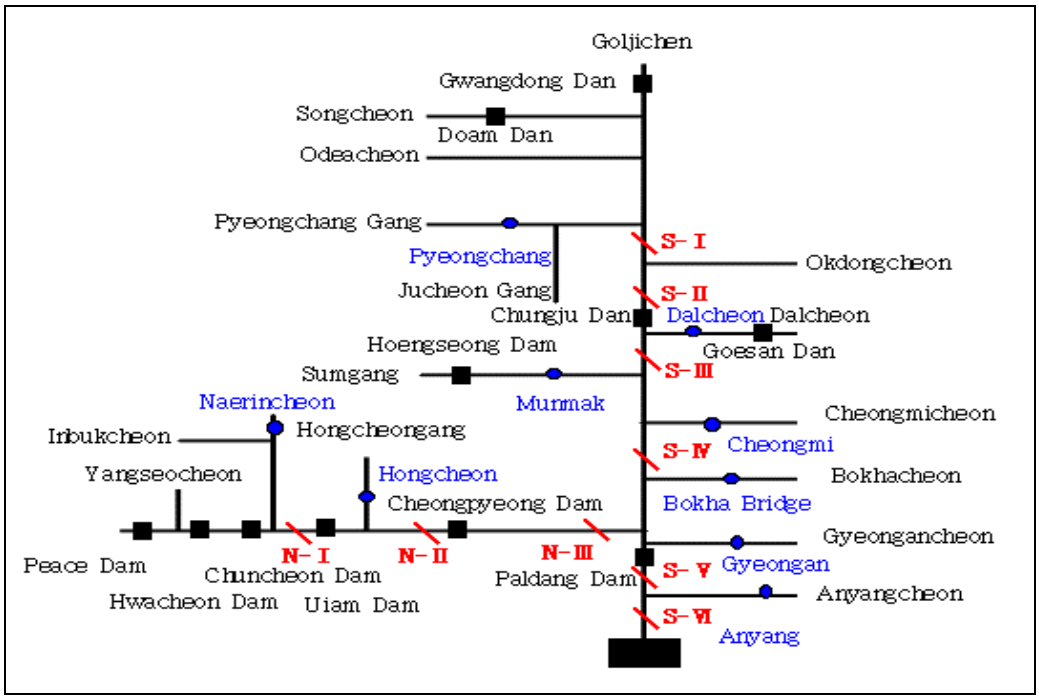

Fig. 1. Han River basin of attraction investigation tool minute and representative point.

3 INSTREAM FLOW INCREMENTAL METHODOLOGY (IFIM)

3.1 PROCESS OF IFIM

Generally, IFIM is recognized as the standard for modeling fish habitat flow needs and is typically the basis for developing recommended instream flows in most of states in USA. IFIM is a series of computer-based models that consider habitat preferences including flow, velocity, and gravel (substrate) for different species and lifestages of fish. It shows how changes in available habitat will result from increases or decreases in stream flow.

IFIM studies begin with a review of the history of a river regarding fish presence and their life histories. Field studies are conducted at selected locations where depth and velocity measurements are made, as well as other habitat conditions. The field data is used in the models to develop values known as "weighted useable area" (WUA) which expresses how the availability of fish habitat is affected by changes in flow levels for different species and lifestages. No single flow level simultaneously maximizes habitat for all species. Thus, the IFIM results are used in combination with other information to develop a final "flow regime" that involves some negotiation and clarification of management priorities.

Figure 2 shows process and main steps of Instream flow incremental methodology. Figure 3 show the process to derive typical habitat suitability curve.

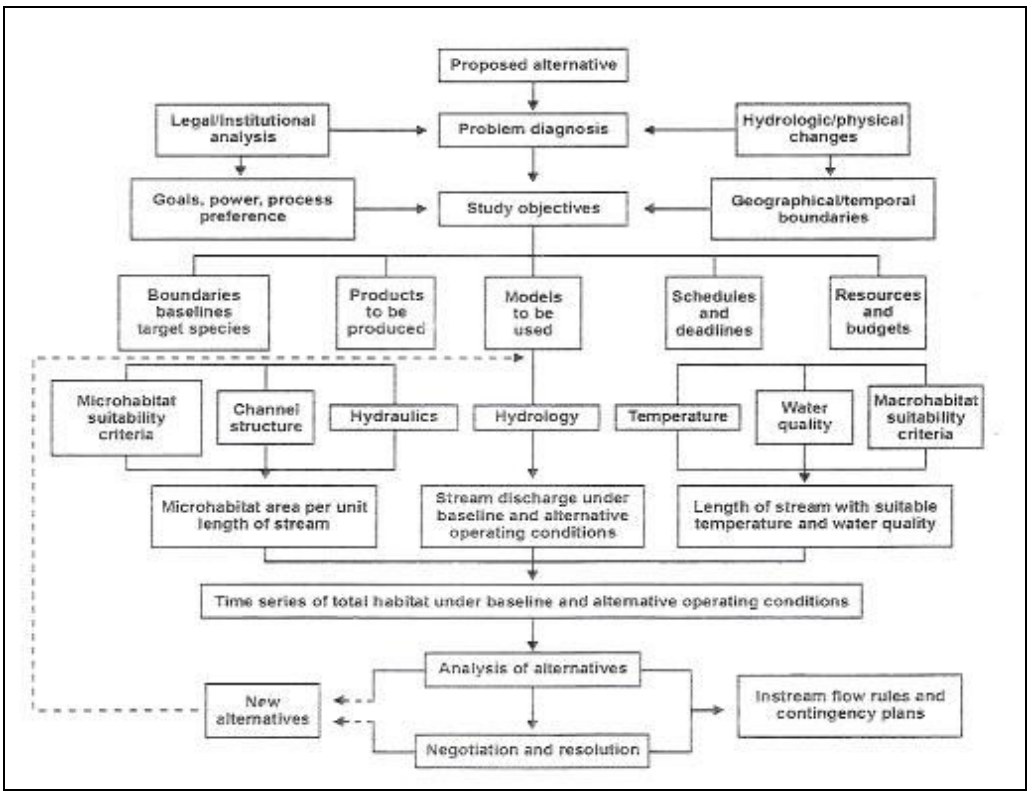

Fig. 2 Schematic diagram of activities and information flow involved in an IFIM study(Bovee,1998)

IFIM consists of a computer program package titled PHABSIM(for Physical HABitat SIMulation system). PHABSIM can provide the relationship between stream flow and WUA in a tabular or graphic form.

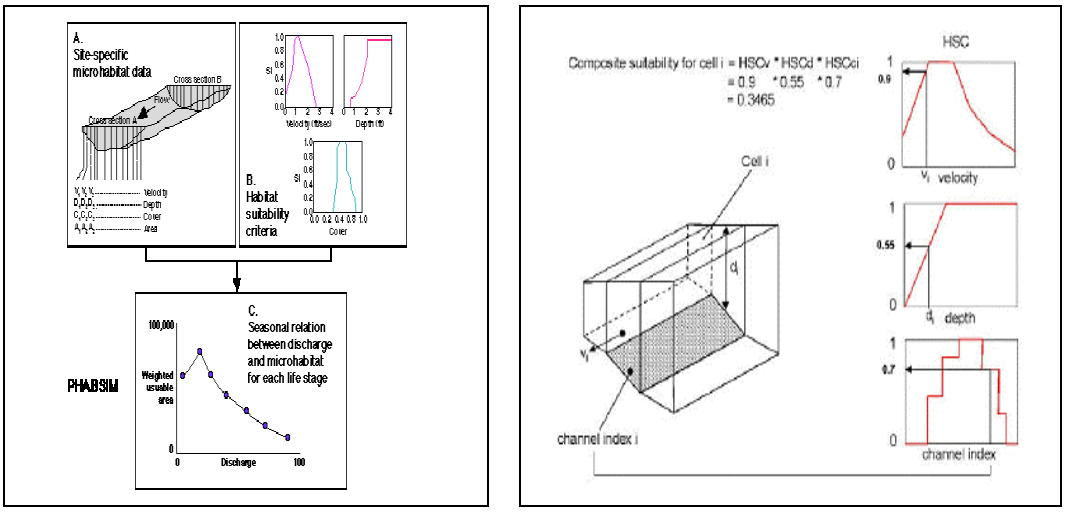

Fig. 3 Concepts of PHABSIM

3.2 FIELD SURVEY

The conceptual model for PHABSIM is a depiction of the site as a mosaic of stream cells as Fig. 3 (A). The lengths and widths of the cells are determined by the investigators on site.
To afford the field data such as surface area, depth, velocity and cover ant particular stream flow, three times of field survey on site were implemented. Fig. 4 show an example of field survey results and velocity measurement.

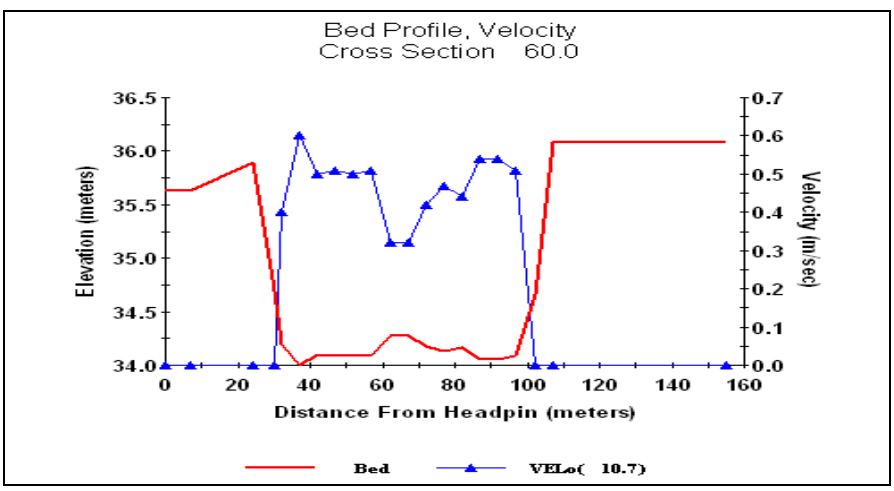

Fig. 4 Field survey and Velocity Measurement Data at Gyeongan

3.3 FISH HABITAT SUITABILITY CRITERIA CURVE

Successful implementation of PHABSIM starts with the acquisition of accurate habitat suitability criteria for the target fishes being evaluated.

At a fundamental level, regardless of what one calls it or how one has derived a suitability curve, they are intended to represent a functional relationship between an independent variable (e.g. depth, velocity or channel index) and the response of a species' and life stage's to a gradient of the independent variable which is expressed over a scale of 0.0 (really bad) to 1.0 (really good). No amount of philosophical debate as to the efficacy of a particular curve development technique should override the basic principal of whether or not the final functional relationship represents the known biology of the target species and life stage.

In this research, univariate format suitability curves for target fishes are developed as Fig. 5 by implementing the field survey and fish collection.

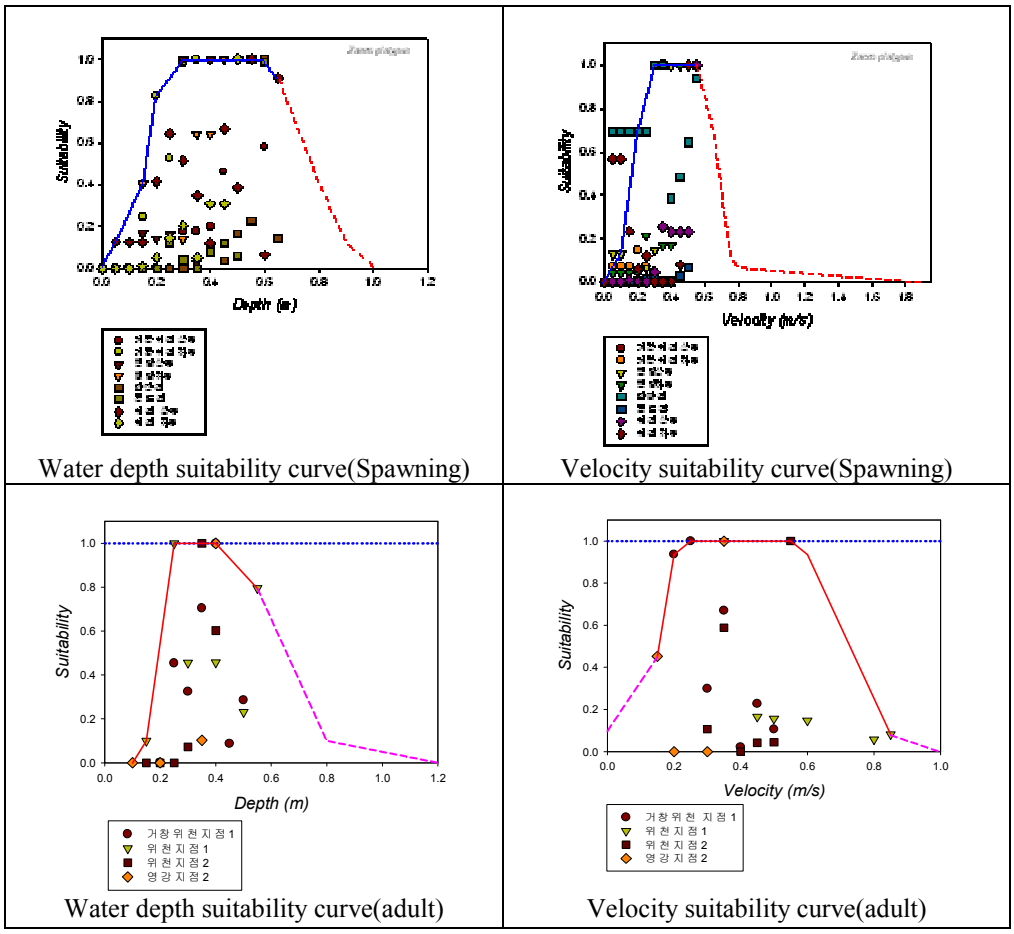

Water depth suitability curve(Spawning) | Velocity suitability curve(Spawning)

Water depth suitability curve(adult) | Velocity suitability curve(adult)

Fig. 5 Habitat Suitability Criteria of zacco platypus(water depth, velocity)

4 ECOLOGICALLY RECOMMENDED INSTREAM FLOW

4.1 SELECTION OF TARGET SPECIES

The selection of target species is usually influenced by river management objectives and to some degree on available information on suitability curves or the potential for development of suitability curves in the target streams. Some studies concentrate on only one or two species of particular importance to a specific instream flow determination. Others may include many species, or guilds of species, to expand the biological data base as much as possible.
In this study, two kinds of fishes (Zacco platypus and Zacco temminkil) were selected as target species depending on each site of streams.

4.2 CALCULATION OF INSTREAM FLOW

The objective of PHABSIM is to obtain the relationship between Weighted Usable Area(WUA) and flow derived from the multiplication of channel area to the combination of habitat conditions by making the changes in the surface of area cell and velocity depending on the flow a hydraulic model and by combining the habitat suitability curve and this relationship.
Fig. 6 show the relational curve between the flow and WUA by simulating the depth and velocity for each cell through the hydraulic model after dividing channel sections into a regular size of cells combining the suitability criteria of micro-habitat conditions(depth, velocity and cover) for target fish species.

$$WUA = \frac{\sum_{i=1}^{n} A_i \bullet C_i}{\mathrm{Re}\,ach\ \ Length} \tag{1}$$

Here, A_i = surface of area cell i
C_i = combined suitability of cell i(depth, velocity and cover)

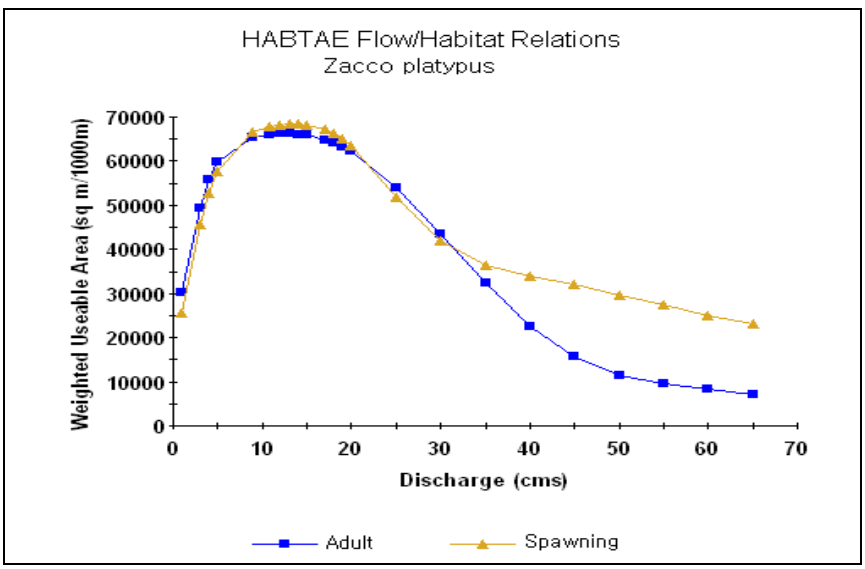

Fig. 6 Weighted Usable Area Curve (Gyeongan Section- Fish)

Table 2. Minimum Instream Flow for habitat condition

Reaches	Site name	Target species	Instream Flow (Adult Fish) (m^3/s)	Instream Flow (Spawning Fish) (m^3/s)
Pyeongchanggang	Pyeongchang	Zacco platypus	17	24
Dalcheon	Dalcheon	Zacco platypus	15	17
Sumgang	Munmak	Zacco platypus	10	19
Cheongmicheon	Cheongmi	Zacco platypus	9	8
Bokhacheon	Bokha Bridge	Zacco platypus	8.5	9.5
Nerincheon	Nerincheon	Zacco platypus	2	3
Hongcheongang	Hongcheon	Zacco temminkil	2	3
Gyeongancheon	Gyeongan	Zacco platypus	13	14
Anyangcheon	Anyang	Zacco platypus	9	7

5 CONCLUSIONS

To ensure the ecologically needed optimum flow in the river system, Physical habitat simulation technique was applied to various upper reaches in Han river basin. The habitat suitability criteria(HSC) was established by applying the univariate curve of Zacco platypus selected as a target fish based on the literature review on fish inhabitation environment and expert opinions. Then the optimum flow for each growth stage(spawning stage and adult fish stage) of Zacco platypus and Zacco temminkil was estimated.

The historical instream flow determination procedure has been easiest to use and require less data. Also instream flows usually determined based on the concepts of hydrological river management and low flows. However, these methods do not analyze site specific habitat alteration or biological response.

The estimated results of ecological recommended instream flow by this study has important meanings that the future river management have to seriously take into account for the natural environment and functions of river system.

6 ACKNOWLEDGEMENTS

The author wishes to acknowledge the support of the Korea Water Resources Corporation (KOWACO), with the project title “Determination of Instream Flow in Han River Basin”.

7 REFERENCES

Bovee, K.D., B.L. Lamb, J.M. Bartholow, C.B. Stalnaker, J. Taylor and J. Henriksen. 1998. Stream habitat analysis using the insteam flow incremental methodology. U.S. Geological Survey, Biological Resources Division Information and Technology Report USGS/BRD-1998-0004. viii + 131pp

Kim, K.H., Kim, S.M., Lee, S.H., Woo, H.S.(1996). "Development of a method for determining the instream flow and It's application: Ⅱ. Application and result," Journal of Korea Water Resources Association, vol. 29 NO.5., pp.185-202.

Kim, K.H., Cho, W.C., Jun, B.H.(2000). "Estimation of suitable flow needs for maintaining fish habitat conditions using water quantity and quality simulation," Journal of Korea Water Resources Association, vol. 33 NO.1., pp.3-14.

Loar, James M, and Michael J. Sale, 1981. *Analysis of Environmental Issues Related to Small-Scale Hydroelectric Development:* V. Insrteam Flow Needs for Fishery Resources. Publication No. 1829, Oak Ridge National Laboratory, Oak Ridge, Tennessee, pp. 123

Milhous, R. T., M. A. Updike, and D. M. Schneider (1989), *Physical Habitat Simulation System Reference Manual-Version II, Information* Paper No. 26. U.S. Fish and Wildlife Service, Office of Biological Services Program, FWS/OBS-89/16, Fort Collins, Colorado.

USGS. (2001), PHABSIM for windows, User's Manual and Exercises, Midcontinent Ecological Science Center.

Woo, H.S., Lee, S.W., Kim, K.H. (1998). "Development of a method for determining of insrteam flow needs required for fish habitat conservation-application to the Keum River," Korea Society of Civil Engineering, vol. 18 Ⅱ-4., pp.339-350