Invited Paper: Progresses in BiNem display technology for e-reading applications

Jacques Angelé [1], Stéphane Joly [1], Philippe Martinot-Lagarde [2], Luc Faget [1], Jesper Osterman [1], Terry Scheffer [3], François Leblanc [1]
[1] Nemoptic, Magny-les-Hameaux, FRANCE
[2] Paris-Sud University, FRANCE, [3] Motif, Inc., Hawaii, USA
Phone: +33 (0)1.39.30.51.60, E-mail: j.angele@nemoptic.com

Keywords: bistable displays, e-paper, e-reading

Abstract

BiNem® displays have entered volume manufacturing in 2009. Applications range from e-labels to e-readers. We have developed 6-inch 960x720 pixels passive matrix BiNem prototypes achieving 40 % brightness and fluid user interface based on partial image / dynamic pointer addressing. Active-matrix addressing is proposed to provide even faster operation.

1. Introduction

The needs of people reading electronic books magazines or documents on nomadic devices drive demand for improvements in e-paper technology.

BiNem technology offers zero power consumption between image updates and excellent optical performance. Its cost model and supply chain are expected to be similar to the ones of conventional LCDs, making it an attractive solution for a range of applications from small e-tags to A4-e-documents [1, 3]. BiNem displays have a structure similar to the one of conventional LCDs and, from a manufacturing point of view, can be produced with the same equipment. The main differences are a thinner cell gap (d ~ 1.5 µm) and the use of specific BiNem materials for alignment layers and nematic liquid crystal mixtures. Texture switching and bistability are governed by anchoring breaking mechanisms quite specific to the technology [2].

Ebooks, e-newspapers, e-magazines readers or e-textbooks are high potential applications that are expanding into major markets. They require excellent readability, fluid navigation in contents and user menus, touch /hand-writing/ pen-input capability, and extended battery life are key attributes of e-reading devices. Color and video capability are additional features of considerable interest. We present new developments of the BiNem technology progressing along these directions.

2. Development of a 6-inch passive matrix BiNem display prototype

We have developed a 6-inch passive matrix B/W BiNem display prototype with a resolution of 720x960 pixels optimized for e-reading application.

Fig. 1: 6-inch 960x720 pixels BiNem display prototype displaying the dynamic pointer.

For book reading, a modest image refresh time (~ 0.5 s) is sufficient. However, modern user interfaces require faster displays to provide visual feedback to users. When the display is coupled to a touch panel, for example, a fast visual feedback of the tactile input (< 0.1 s) has to be provided. To support this mode, we have developed a dynamic pointer. This

pointer is refreshed at high rate (> 20 Hz) and appears as a grey area that the user can move in any region of interest to highlight/select part of the text, images or menu items, providing a useful fluid navigation tool, and a fast dynamic visual feedback to user's actions.

In addition, a partial image refreshing mode has been implanted to shorten the display refresh time when only small regions of the image need to be modified. Local changes in selected blocks of lines can be made without affecting the image stored outside, making the modification of a word or a line of text much faster than a full image refresh.

3. Development of 1-polarizer optics

Printed paper is characterized by a high reflectance level being nearly independent of the viewing angle, achromatic black and white states, and no disturbance coming from any front reflections. To provide paper-like appearance to BiNem displays, a new BiNem optical mode using a single polarizer has been developed. Compared to the 2-polarizer mode with white balancing film described elsewhere [4, 5], the 1-polarizer optical mode offers higher brightness (40%) and excellent contrast ratio (>8:1) at normal incidence.

Non-compensated 1-polarizer BiNem optics is based on a cell retardation of ~λ/4 (i.e. 138 nm) and an orientation angle of the polarizer transmission axis at ~ 45° relative to the (anti-parallel) rubbing direction. It gives an achromatic bright T state with high reflectance and a dark U texture. Unfortunately, the dark state shows large light leakage resulting in purplish hue and low contrast. The 1-polarizer mode can be contrast enhanced by using achromatic λ/4 retardation film compensation between the top polarizer and the LC cell [6]. This method, however, increases the chromatic behavior of the bright state because it inverts the optical response of the T and U textures.

An achromatic λ/4 retardation film is made up of one or two λ/2 films in combination with a λ/4 film. Even though each film is chromatic in itself, when combining them at optimal angles the overall optical response will be highly achromatic [7]. Based on this principle we can consider using only one λ/2 film in combination with a λ/4 BiNem cell as shown in Fig. 2.

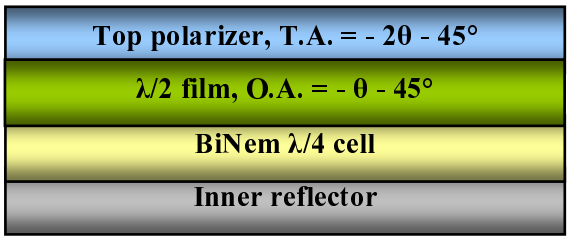

Fig. 2. Optical stack of the 1-polarizer BiNem display. T.A. describes the orientation of the polarizer transmission axis while O.A. describes the optical axis of the λ/2 film.

Fig. 3 shows theoretical simulations of the contrast ratio and the brightness of the λ/2-compensated 1-polarizer BiNem display as a function of the θ angle. The θ angle defines the orientation angle of the λ/2 film and the polarizer.

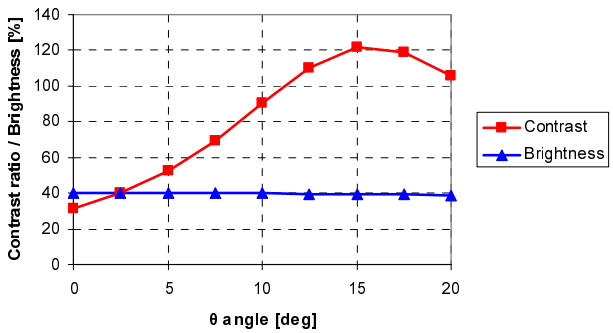

Fig. 3. Simulated contrast and brightness of the contrast enhanced 1-polarizer mode as a function of the θ angle.

In such configuration the U texture will be giving a dark optical response with reduced light leakage resulting in increased contrast compared to the non-compensated mode. At the same time the bright state is given by the preferred and intrinsically less chromatic T texture.

The results presented are for normal incidence. 2×2 optics was used in the simulations and an ideal reflector assumed. Maximum contrast is reached for θ ≈ 16°. When the θ angle increases, the brightness decreases moderately, but a non-preferred color shift towards a yellowish/green hue appears. Therefore, choosing a moderate θ angle defines a suitable compromise between bright and dark state optics, because λ/2 film at the design wavelength rotates polarized light with an input angle θ by an angle 2θ; this rotated polarization then makes a 45° angle with the LC director when in the U texture to produce

circularly polarized light after a single passage through the LC layer. As such, any angle θ will work, however as shown in Fig. 3, θ ≈ 16° gives the minimum light leakage of the dark state.

Table 1 summarizes the optical properties experimentally measured on two different 1-polarizer configurations, compared with the previous 2-polarizer reference configuration.

TABLE 1. Optical properties of the various BiNem configurations

Optical config	Bright -ness	Bright color	Cont -rast	Comments
1-polarizer, outer reflector	39.4%	u'=0.2055 v'=0.4784	4.5:1	Low contrast, purplish dark state
1-polarizer, λ/2-comp, inner reflector	41.1%	u'=0.2041 v'=0.4840	8:1	λ/2 compensated test cell (θ=7°) Improved dark state
2-polarizer, white-balanced, outer reflector	36.9%	u'=0.2010 v'=0.4703	8:1	2-polarizer ref. configuration

When using an internal reflector and λ/2-compensation, the 1-polarizer mode exhibits high brightness (>41%) with close to neutral bright state color, while keeping a contrast ratio comparable with the one of the 2-polarizer mode. As it benefits of being parallax-free, this optical BiNem mode is very important when considering the BiNem display for various advanced high-content e-reader applications.

The measured contrast ratio is smaller than the theoretical one because the dark state integrates the contributions of many pixels, including both the dark pixels and the brighter interpixel neighboring.

Tailored polarizers with anti-glare/anti-reflection top coating and high haze adhesive, and the other optical components of the optical stack, have been carefully selected to optimize the paper-like appearance of the display prototypes.

4. Characteristics of the 6-inch BiNem display prototype

Display prototypes have been manufactured in both the 1-polarizer and 2-polarizers configuration. Their characteristics are summarized in Table 2 below. In addition, the prototypes are fully compatible with the transflective mode, enabling excellent readability in the dark when backlighted.

TABLE 2. Characteristics of the BiNem display prototypes

Diagonal	6.0"
Columns x Rows	720x960 pixels
Resolution	200 dpi
Brightness (reflectance)	40 % (white state, 1-pol. mode)
Contrast ratio	> 8: 1 (diffuse illumination, specular excluded)
Viewing angle	120° (CR > 2)
Parallax	None (1-pol. mode)
Refresh time (full image)	500 ms (25°C)
Partial refresh time (20 rows)	20 ms (25°C)
Dynamic pointer refresh time	50 ms (25°C)

5. Active matrix BiNem

Reducing the refresh time of BiNem displays is essential to enhance the user/device interactivity (compatibility with mouse devices, touch-screens, drop-down menus, windowing, etc.). Video capability, even at the expense of extra power, enlarges the field of e-reading applications. With active matrix addressing, BiNem displays can fully exploit their intrinsic short pixel response time [3].

Fig. 4 shows the simplest addressing scheme to refresh a row either on PM or AM BiNem displays. In a first approximation, the comparison of the average electrical addressing time of a single row, between a passive T_{PM} and an active matrix T_{AM} BiNem display shows that the later is at least 6 times faster.

In PM mode, the refresh time T_R of a row with the 2-voltage level waveforms [8] lasts over $T_R = 2T$, where $T \approx 500\ \mu s$ is a typical plateau duration at room temperature. For a display having a large number of rows, $N_R >> 1$, the average refresh time per row $T_{PM} = T_{FRAME}/N_R$ is very close to T_R.

It is no longer the case in AM mode. Three gate pulses are necessary to build a comparable waveform, each pulse lasting $T_G \approx 50\ \mu s$. On a given row, the period of time between two consecutive pulses is still T, but it is used to address other rows [9]. When the waveform of the 1st row ends after T_R, the waveform on its following row ends only $\Delta T = 0.3T$ later. Therefore, the average time T_{AM} to refresh one row becomes:

$$T_{AM} = \frac{T_R}{N_R} + \frac{N_R - 1}{N_R} \cdot \Delta T \approx 0.3T \quad \text{(Eq. 1)}$$

The ratio $T_{PM} / T_{AM} \approx 6.7$ is, in a first approximation, the display refresh time ratio between the PM and AM addressing modes.

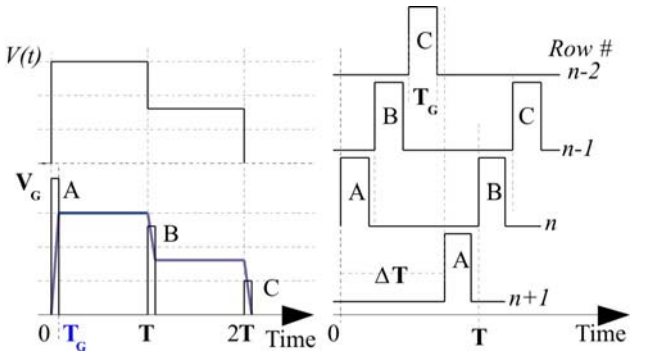

Fig. 4. Comparison of the electrical addressing time in PM and AM-BiNem displays. Left figure: Upper waveform: PM-*BiNem*® displays; the addressing time must be at least equal to the time needed to break the anchoring (T) and to select the texture (T). Lower waveform: AM-*BiNem* displays; a similar pixel driving waveform is obtained with three short gate pulses A, B, C. Right figure: Chronogram of the gate pulses on different rows.

We have performed simulations for a 200 dpi SVGA AM-BiNem display in portrait mode. TFT parameters are $I_{ON} \approx 7\ \mu A$ as the maximum drain-source current, $tc \approx 10\ \mu s$ the pixel charge time constant, a maximum pixel voltage of $30\ V$, compatible with TFT drivers, a liquid crystal cell gap of $d = 1.5\ \mu m$ filled with a mixture having $\varepsilon_{//} = 28.4$ and $\varepsilon_a = 21.7$ at room temperature. We have chosen W/L ~ 3 (width/length ratio of the transistor canal) from the data available in the literature.

The simulations predict a refresh time ~ 120 ms at room temperature, which compares favorably with other e-paper technologies; a 25 Hz refresh rate, close to video rate, is expected in a QVGA sub-window.

The AM-BiNem bistable pixels need to hold a voltage during a period T shorter than usual frame time T_{FRAME}, lowering the constraint on the Voltage Holding Ratio compared with standard TFT-LCDs. As a consequence, the storage capacitor is expected to be useless. The estimated maximum leakage current for a voltage drop of 1V during this period of time T is $I_{OFF} < 5nA$. At last, combining the advantage of not having a storage capacitor and a standard canal length of L = 5µm, we expect a theoretical maximum aperture ratio of 84.5%. More reasonably, by doubling the W/L ratio, the aperture ratio would still reach an excellent 84%.

6. Summary

We have developed high resolution 6-inch BiNem display prototypes using a new one-polarizer parallax free optics achieving a brightness > 40 %, and providing moving pointer / partial addressing capability.

An active-matrix (AM-BiNem) technology has been proposed to provide even faster operation, including moving images/video operation.

We are confident that the AM-BiNem technology meets the need of high potential e-reading applications such as ebooks, e-newspapers, e-magazines readers or e-textbooks.

7. References

1. J. Angelé et. al., IDW'07 Digest of Technical Papers, p. 265 (2007)
2. I. Dozov et al., Proceedings of SPIE, 3015, 61 (1997).
3. J. Angelé et. al., SID Digest of Technical Papers, 1634-1637 (2006).
4. C. Joubert et al., Proceedings of the 10th International Display Workshop, p.17 (2003).
5. C. Joubert et al., SID'05 Technical Digest, Vol. 36, p.1766 (2005).
6. J. Osterman and K. Skarp, Opt. Express, Vol. 11[10], p.1197 (2003).
7. S. Pancharatnam, Indian Academy Sci. Proceed., Vol. A41, p.130 (1955).
8. M. Giocondo et al., Phys. J., 5[3], p.227 (1999).
9. P. Martinot-Lagarde et al., Patent no. WO 2004/051357 (2004).