Throughput Enhancement of C-RAN based on Adaptive Frequency Reuse

Zhi-feng Lin, Inwhee Joe
Dept. of Computer & Software Engineering , Hanyang University
hooligan110@126.com

abstract

C-RAN (Cloud Radio Access Network) structure is the most popular approach for 5G stander, it employs CoMP (Coordinated Multiple Points Transmission/Reception) to enhance frequency utilization and increase throughput for cell-edge users. C-RAN mainly includes two parts: baseband units (BBU) and remote radio heads (RRH). In this paper we propose a new resource block allocation (spectrum allocation) scheme by the permutation and combination of BBUs, and we also use the CoMP (Coordinated Multiple Points Transmission/Reception) technique according to the different environment to improve the spectrum utilization and reduce resource waste in different environment. The simulation results expound that the scheme significantly enhances throughput and improves the spectrum utilization.

1. INTRODUCTION

C-RAN architecture has been proposed for the next generation cellular network [1]. In C-RAN the RF (radio frequency) unit, referred to as distributed RRH, and the centralized BBUs [2]. The BBU can share user data for processing, and reduce the complexity of computing. The purposes of C-RAN system are to enhance frequency utilization and increase the throughput for cell-edge users. In OFDM (Orthogonal Frequency Division Multiplexing) cellular the edge users experience the inter-channel interference which seriously lead to system performance degradation. In view of the analysis it is low utilization of the spectrum allocation in the single cell. C-RAN employs CoMP can solve the problem and enhance frequency efficiency. CoMP is divided into two approaches: one is CS/CB (Coordinated Schedule/Beamforming) scheduling in each transmit node to reduce the inner-cell interference, in essence it is kind of interference avoidance by distribute different frequency to adjacent users. The other is JP (Joint transmission) when user under the multi node coverage area JP will choose the conditional best node of the channel to the user. There are many kinds of frequency reuse schemes in [3] the author proposed a hybrid dynamic frequency reuse and CoMP method for macro-cell / femtocell; and Huawei proposed the Soft Frequency Reuse (SFR) [4]; Siemens proposed Partial Frequency Reuse (PFR) [5]; and a researcher proposes based graph coloring method to allocate spectrum resource and avoid the inter-cell interference [6] in C-RAN. In this paper we propose a new scheme in C-RAN by the permutation and combination of baseband units in Fig. 1 and use the CoMP to assist date transmission enhance throughput and improves the spectrum utilization.

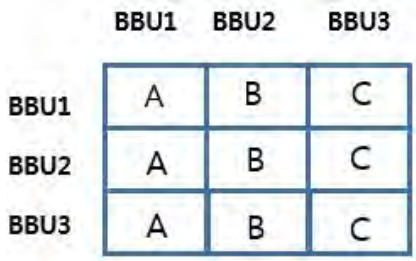

Figure 1. Spectrum allocation by BBU

2. SYSTEM MODELING

On the transverse side, the Cell 1 can be divided into A, B and C frequency, BBU 1, BBU 2 and BBU 3 on the left side can control Cell 1, Cell 2 and Cell 3 respectively. While on the vertical side the BBU 1 on the top control all the A areas of all cells (cell 1, cell 2, cell 3); BBU 2 control B areas; BBU 3 control C areas. These two proposes modes could be transformed by a switch according to the Fig. 1 and 2.

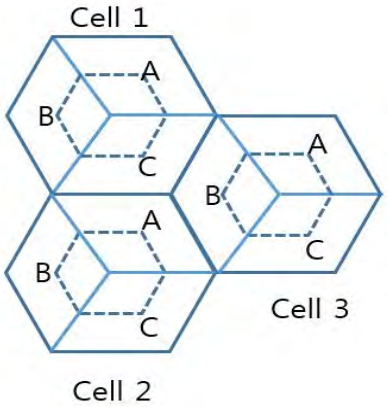

Figure 2. Frequency allocation in all Cells

BBUs could allocate spectrum and reuse frequency more efficiently due to the permutation and combination, which can reduce the inter-cell interference and the co-cell interference for users in different areas as shown in Fig 2.

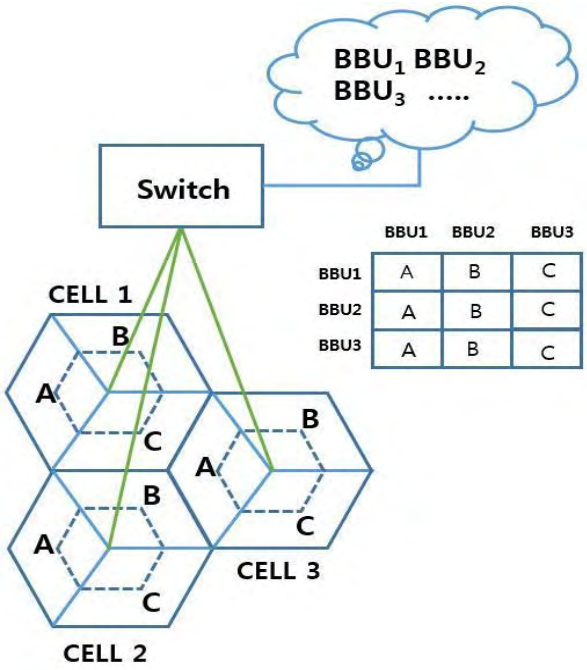

Figure 3. frequency reuse by BBUs permutation and combination in C-RAN

Fig. 3 shows a description of this system in C-RAN. It is different from the general base stations, divided into two parts BBU and RRH. BBUs are used for collecting and processing data, while RRHs are just for transmitting and receiving them, so it can coordinate with the spectrum allocation optionally, in single cell and in all cells. BBUs are not only just control one cell but also can adjust the spectrum in all cells, so the new structure can reduce energy consumption and improve the spectrum utilization [6]. The arrangement of BBUs on the left side control one cell for the spectrum allocation shown is with the coloring areas in Fig 4.

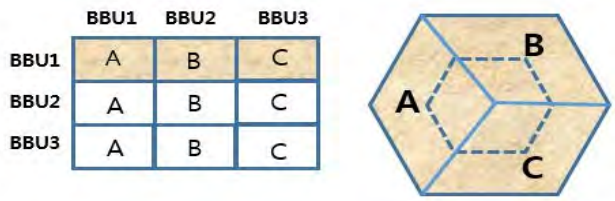

Figure 4. BBU control a cell

Fig. 5 shows that the coloring areas and BBUs adjust the spectrum in all cells when the BBUs were grouped on the top. For example, when many users are in CELL 1 area A but the CELL 2 area A is idle, we can schedule the idle spectrum to assist the busy areas.

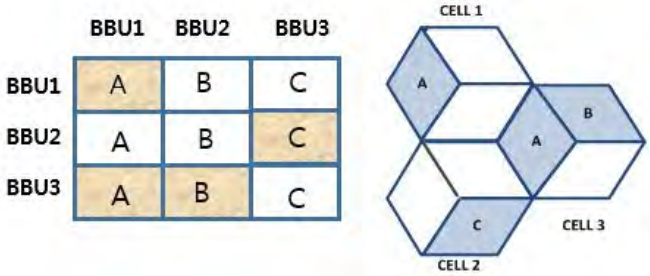

Figure 5. BBUs adjust the spectrum in all cells

3. SIMULATIONS AND RESULT

In this section, we are going to show the performance based on C-RAN structure. We use 3-xectored hexagonal to implement our scheme, and the bandwidth of each BBU is B=20MHz. The users in each part of cells are randomly distributed, with the number of 10-300. The calculation of throughput is as follows:

$$throughput = \frac{\sum (N\_of\_pks \times pk\_size)}{T}$$

N is the numbers of the packets with valid data, and T is the total time. CoMP is able to extend service coverage and enhance cell edge transmission by coordinating multiple transmission points [3], and according to different situations we use CoMP to support the transmission. The parameters are in table 1.

Parameter	value
Cell layout	3-sectored hexagonal
Carrier frequency	2 GHz
Number of users	10,50,100,150,300
User location	Random(cell center cell edge)
bandwidth	20 MHz
Path loss (LOS)	100.7+23.5log10(R)dB [7]
Path loss (NLOS)	120+36.3LOG10(R)dB [7]

<TABLE 1 Simulations Parameter>

The simulation result in Fig. 6 shows that the throughput of users in each cell on C-RAN structure. The method 3 with the star point, shows that one BBU control one cell type like Fig. 4, can schedule by using CoMP but frequency reuse does not work so well and also not helpful in resource allocation. The type of Fig.5 BBUs adjust the spectrum in all cells is the method 2, it is suitable for the frequency reuse and improves the spectrum utilization, but in some situations, for example when many users are just in one cell there is no need for all BBUs adjust the spectrum for working on that, when the users are over 200 the throughput gain becomes unobvious, so we made a switch to solve the problems due to the permutation and combination of BBUs, it can be switch between method 3 and the method 2. So the proposed method 1 is better than other two.

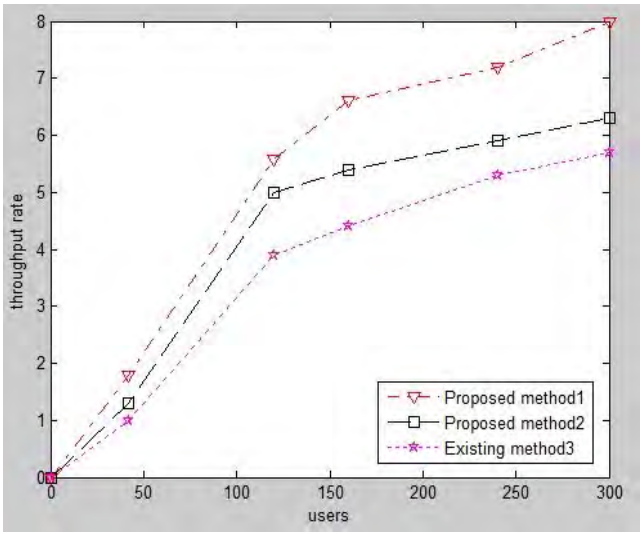

Figure 6. Comparison the throughput

4. CONCLUSION

Current trends in the developing of the C-RAN already can be supported by the existing core infrastructure [8]. CoMP is used to coordinate Base Station transmissions in order to reduce interference and improve cell-edge throughput. In this paper, we proposed the scheme by the permutation and combination of BBUs to enhance throughput and improve the spectrum utilization under the C-RAN structure. The simulation results expound that we increase the throughput in a way, and we will continue to research C-RAN structure and CoMP for the 5th Generation communication system.

REFERENCES

[1] China Mobile Research Institute, C-RAN The Road Towards Green RAN White Paper, v2.5, Oct. 2011. [Online]. Available: http://labs.chinamobile.com/cran/

[2] Manli Qian, Wibowo Hardjawana, Jinglin Shi, and Branka Vucetic, “Baseband Processing Units Virtualization for Cloud Radio Access Network”, IEEE Wireless Communications Letters, Vol. 4, No. 2, April 2015.

[3] Hung-Chin Jang, wei-Di Wend, “Interference Management Using Frequency Reuse And CoMP For LTE-Advanced Networks” IEEE ICUFN 2015.

[4] Huawei, “Soft frequency reuse scheme for UTRAN LTE,” 3GPP TSG RAN WG1 Meeting#41, R1-050507, May 2005.

[5] Siemens, “interference mitigation by partial frequency reuse,” 3GPP TSG RAN WG1 Meeting#44, R1-060670, February 2006.

[6] Kaiwei Wang∗ , Ming Zhao† and Wuyang Zhou†, “Graph-Based Dynamic Frequency Reuse in Cloud-RAN,” IEEE WCNC’14 Track 1 (PHY and Fundamentals).

[7] XUE HAI, “Throughput Enhancement for Relay Backhaul Link Using Guard Band in the FDD and TDD Coexistence of LTE-A System,” Graduate School of Hanyang University, February 2016.

[8] Alexander Dawson, Mahesh K. Marina, Francisco J. Garcia, “On the Benefits of RAN Virtualisation in C-RAN Based Mobile Networks,” 2014 Third European Workshop on Software-Defined Networks.