원자력발전소 전기기기의 보수, 교체 방법론

박철희*†, 박완규*, 이만복*. 김춘삼†
㈜한국수력원자력*, 강원대학교†

Repair and Replacement Methodology for Electrical Equipment Used in Nuclear Power Plants

Park Chulhee*†, Park Wan gyu*, Lee Manbok*, Kim Choon sam†
Korea Hydro Nuclear Power Co. Ltd*, Kangwon National University†

ABSTRACT

After Fukushima nuclear accident at 2011, nuclear industrial has been focused on operation and maintenance phase, not design and construction phase. Continued good operating performance of nuclear power plants has been the best critical issue to nuclear utilities. Replacement for complete components as well as parts of components is being procured because nuclear utilities must maintain safety and reliability of operating nuclear power plants. However, many suppliers and manufacturers are giving up a nuclear quality assurance program under reduction in new construction of nuclear power plants. It is able to be increased difficulty in procuring spare parts to support operations and maintenance of nuclear power plants. Over 20% of nuclear power plant equipment in some countries is obsolete[1]. Owing to obsolescence of nuclear safety related items and/or withdrawing a nuclear quality assurance program of suppliers and manufactures, some replacement item and part might be procured to the item not covered by appendix B to USNRC 10 CFR Part 50. Under various methods of the nuclear repair and replacement methodology, utilities are supposed to establish a typical program for a repair and replacement of an electrical equipment and its parts in conjunction with a nuclear quality assurance. Concerning this typical program, this study suggests the repair and replacement methodology of electrical equipments used in nuclear power plants by procurement of a power supply, based on nuclear regulations, codes, standards, guidelines, specific and general technical information, etc..

1. Introduction

Many nuclear technical guidelines suggest the schematical nuclear repair and replacement processes. Especially, EPRI has proposed the typical nuclear repair and replacement with procurement process in NP 6629 as following six basic steps :

Identification of Needed Item[2]
Establishment of Technical and Quality Requirements[2]
Selection of Procurement Scenario and Supplier[2]
Acceptance Criteria and Acceptance Method[2]
Preparation and Placement of the Purchase Order[2]
Item Acceptance[2]

Each step shall be performed with document controls mentioned on appendix B to 10 CFR Part 50.

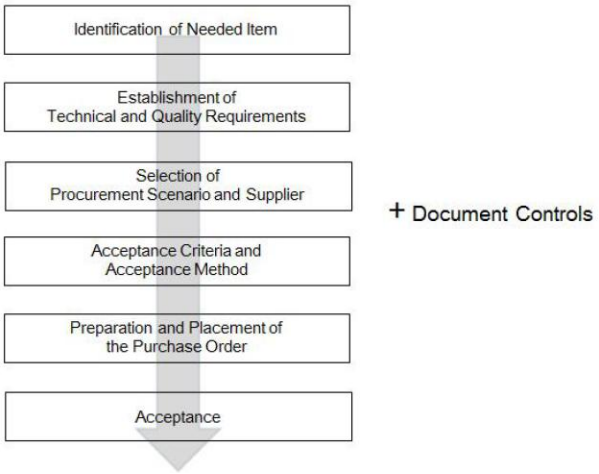

Fig. 1 Six Steps of the Nuclear Procurement Process

This study shows repair and replacement methodology for electrical equipments used in nuclear power plants from specific application of a power supply with nuclear repair and replacement process from EPRI.

2. Identification of Needed Item

First step of the process is identification of needed item. This step consists of preparing a request for a needed item. Utilities shall identify what item is needed, and where that item will be used[2].

Needed electrical equipments should include minimum one or more below identifications :

Electrical Information such as Voltage, Ampere, etc.
SSC (Structure, System and Component) and Its Tag Number
Part or Model Number of Parts
Name of Original Supplier and Manufacturer
Number of Drawing and Item
Class of Safety, Quality, Electrical and Seismic
Environmental Condition for Radiation
Availability of EMC Qualification
Software Verification and Validation
Functional Mode such as Active or Passive

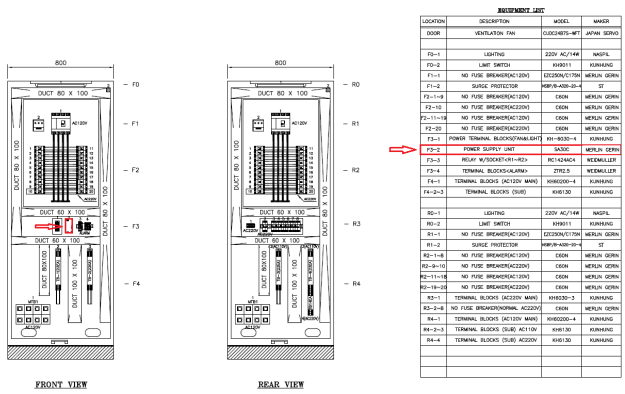

Fig. 2 Sample General Arrangement Drawing showing the Power Supply

3. Establishment of Technical and Quality Requirements

For correct repair and replacement of electrical equipments, utility should build adequate or reasonable technical and quality requirements compared to an original equipment.

3.1 Establishment of Technical Requirements

Needed electrical equipments have design characteristics that those properties or attributes that are essential for an equipment and its part's form, fit, and functional performance. Design characteristics are the identifiable and/or measurable attributes of repair and replacement to provide adequate confidence or reasonable assurance. Following sample properties or attributes may be design characteristics :

Type of Power Supply (e.g. Linear or Switch Mode Power Supply
Equipment Qualification (e.g. IEEE 344, RCC E, MIL STD 461)
Electrical Requirements (e.g. Voltage, Ampere, Rating, Efficiency)
Dimensional Requirements (e.g. Fit, Form)

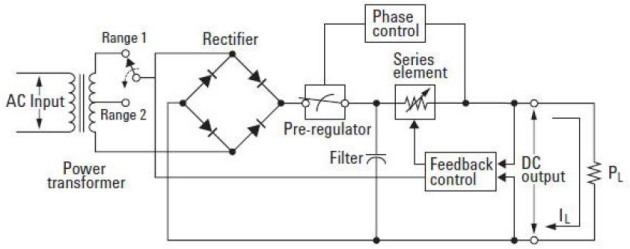

Fig. 3 Sample Schematic Diagram of Linear Power Supply[3]

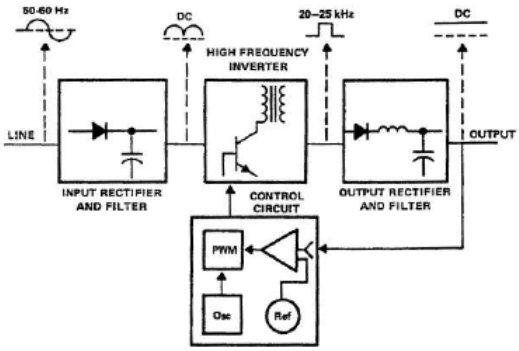

Fig. 4 Typical Block Diagram of Switch Mode Power Supply[4]

3.2 Establishment of Quality Requirements

Quality requirements of electrical equipments and its part to assure the technical requirements are imparted to repair and replacement. The paragraph 4, Section of Procurement Scenario and Supplier, should be subject to quality requirements.

4. Selection of Procurement Scenario and Supplier

For repair and replacement of electrical equipments, selection of procurement scenario and supplier should be performed.

4.1 Selection of Procurement Scenario

As per establishment of paragraph 3.2, a related basic procurement scenario should be determined as following Fig. 4 :

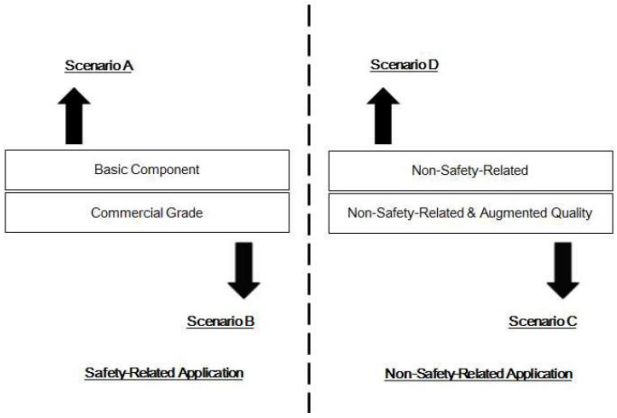

Fig. 5 Classification per Procurement Scenario

4.2 Selection of Supplier

As per utility's technical and quality requirement, nuclear market condition, etc., selection of supplier will be determined. There are three types of selection of supplier are typically applied :

Single Evaluation Approach for Private contract[5]
Two Stage Evaluation Approach for Competitive Contract[5]
Multi Evaluation Approach for Competitive Contract[5]

5. Acceptance Criteria and Acceptance Method

Next step is to establish acceptance criteria and acceptance method.

5.1 Acceptance Criteria

Acceptance criteria means what utility verifies. Technical and quality requirements of electrical equipment are used for establishment of reasonable acceptance criteria. Acceptance range or tolerances should be considered when utility establishes acceptance criteria. Acceptance criteria is called to critical characteristic.

A power supply focused on a electrical equipment has many critical characteristics considering technical and quality requirements including its safety function. Utility typically determines the related critical characteristics referenced as following :

Marking and Identification
Condition including Dimension, Configuration and Weight, and Quantity
Output Voltage, Ampere and High Frequency Ripple Noise
Load Regulation and Overload Protection
Alarm Relay Function

5.2 Acceptance Method

Acceptance method briefly means how utility verifies. Acceptance method is selected to provide objective evidence which meet with acceptance criteria established[2]. Following acceptance method can be applied for electrical equipments.

Supplier and/or Manufacturer's Documentation Review
Source Evaluation
Item Receipt Inspection, Post Installation Testing

6. Preparation and Placement of the Purchase Order

Next step is to prepare and place a purchase order. A purchase order is the primary interface between utility and supplier. A purchase order should include what utility's needs based on technical, commercial, quality and other requirements. This step is processed as following procedure :

Establishment of Request for Quotation and Bidding
Negotiation with Supplier and Purchase Order

7. Acceptance

Final is acceptance. An electrical equipment or its part accepted for use in nuclear power plants after acceptance methods are successfully completed.

Acceptance is the process of ensuring by objective result that an electrical equipment and its parts meet acceptance criteria through acceptance method. Some low level's item like resistor, capacitor, transistor, etc. are commonly accepted by supplier or manufacturer's a warehouse or a plant while related receiving process. Acceptance is a shared responsibility between utility and supplier based on nuclear quality assurance.

Personnel should also be alert to indications that an item may be nonconforming, substandard or provided with fraudulent certification[2].

8. Conclusion

Repair and replacement for electrical equipments and its whole related activities are the key to safety of nuclear power plants. A programatic approach can ensure that replaced equipments and parts do not adversely affect safe operation of a nuclear power plant. This programatic approach needs to support a large process. Utility should manage a full list of components installed in a nuclear power plant, their criticality to nuclear safety and economic operation, and their supporting spare parts listings, drawings, specifications, and maintenance documents.

We think that electrical equipments are very reliable. However, there is limited information that ties together procurement and operating history, maintenance practices, and data associated with repair and replacement item. Also, the issue of equipments and parts obsolescence affects many of the considerations associated with maintenance decisions of nuclear power plant.

Although condition monitoring has been utilized to some extent to determine proper repair and replacement, the results have not been as definitive as had been desired. From this study, time based repair and replacement appear to be the most prudent approach for electrical equipments that are deemed critical.

Reference

[1] M. Tannenbaum, M. Tulay, "Plant Support Engineering : Obsolescence Management", Electric Power Research Institute, 1016692, pp V, 2008, November.

[2] J.A. Larson, R.K. Pierson, W.H. Houston, "Guidelines for the Procurement and Receipt of Items for Nuclear Power Plants (NCIG 15)", Electric Power Research Institute, NP 6629, 1990, May.

[3] "Understanding Linear Power Supply Operation", Agilent Technologies, Inc., Application Note 1554, 2005, February

[4] W.E. Johnson, "Power Supply Maintenance and Application Guide", Electric Power Research Institute, 1003096, 2001, December.

[5] "IAEA Nuclear Energy Series, Invitation and Evaluation of Bids for Nuclear Power Plants", International Atomic Energy Agency, NG T 3 9, 2011, November