BULLETIN
OF THE
KOREAN CHEMICAL SOCIETY

VOLUME 15, NUMBER 9
SEPTEMBER 20, 1994

BKCS 15(9) 699-810
ISSN 0253-2964

Communications

Bimetallic Reaction Systems Involving Group 9 Metallacarboranes : Synthesis and Characterization of [*closo*-3-CO-3-PPh_3-7-μ-H-3,7-{Cu(PPh_3)}-3,1,2-$MC_2B_9H_{10}$] (M=Rh, Ir)

Jinkwon Kim† and Youngkyu Do*

†*Department of Chemistry, Kongju National University Kongju 314-701, Korea*
Department of Chemistry and Center for Molecular Science Korea Advanced Institute of Science and Technology Taejon 305-701, Korea

Received May 2, 1994

We are currently investigating the chemistry of the heterodinuclear group 6 metallacarborane complexes [$TlM(CO)_3(C_2B_9H_{11})$]$^-$ (M=Cr, Mo, W). These species are becoming important precursors for synthesis of cluster complexes containing bonding interactions between the group 6 transition metal and other metallic element *via* convenient TlCl elimination reaction with a halogeno-metal complex. Examples of this class obtained by our and other research groups include the heterodinuclear [$(Ph_3Sn)M(CO)_3(C_2B_9H_{11})$]$^-$ (M=Cr, Mo, W)[1] the heterotrinuclear [$Rh_2W(\mu\text{-}CO)(CO)_2(C_5Me_5)_2(\mu\text{-}H)_2(C_2B_9H_8Me_2)$],[2] and the heterotetranuclear [$M_2Cu_2(\mu\text{-}CO)_4(CO)_2(\mu\text{-}H)_2(C_2B_9H_{10})_2$]$^{2-}$ (M=Mo, W).[3] Such a synthetic usefulness of the thallium-containing group 6 metallacarboranes prompts us to examine the bimetallic reactivity of other metallacarboranes involving thallium-metal bond, espcially group 9 complexes [$TlM(CO)(PPh_3)(C_2B_9H_{11})$][4] toward $CuCl(PPh_3)_3$. Reported herein are brief accounts of the synthesis and structural characterizations of heterodinuclear metallacarboranes [*closo*-3-CO-3-PPh_3-7-μ-H-3,7-{Cu(PPh_3)}-3,1,2-$MC_2B_9H_{10}$] (M=Rh; 1, Ir; 2).

The salt elimination reaction of [*trans*-$MCl(CO)(PPh_3)_2$] and $Tl_2C_2B_9H_{11}$ in CH_2Cl_2 afforded [$TlM(CO)(PPh_3)(C_2B_9H_{11})$] (M=Rh, Ir) as reported previously.[4] Important aspects to be emphasized in this work include the convenience for subsequent *in situ* derivation as well as reaction work-up. An orange slurry produced from the above equimolar reaction system was allowed to react anaerobically with equivalent anhydrous $CuCl(PPh_3)_3$. Stirring of the resulting yellow orange mixture for several hours at ambient temperature was followed by removal of grey solids by filtration on Celite pad. The concentrated filtrate was treated with an excess amount of *n*-pentane. The yellow orange crystalline solids were collected and recrystallized from CH_2Cl_2-*n*-pentane, yielding analytically pure[5] products 1 and 2 in yields of 47 and 64%, respectively. Various spectroscopic data[5] for these compounds indicate that they are structurally similar.

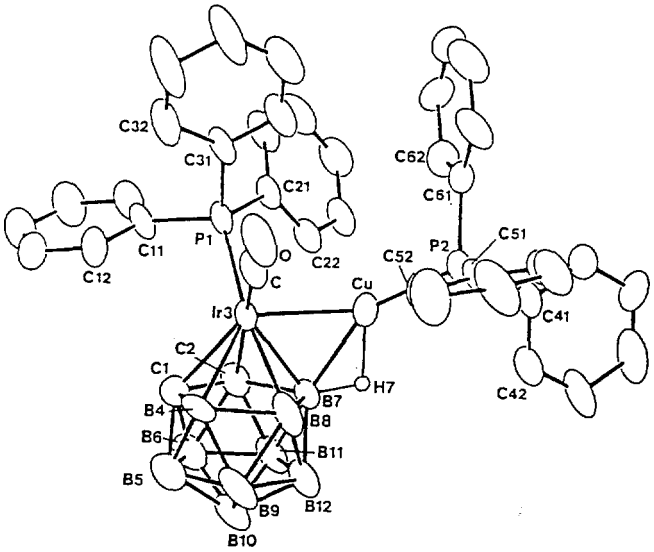

Figure 1. ORTEP diagram of [*closo*-3-CO-3-PPh_3-7-μ-H-3,7-{Cu(PPh_3)}-3,1,2-$IrC_2B_9H_{10}$] (2), showing the atom-numbering scheme. All hydrogen atoms except the bridging hydride have been omitted for clarity. Dimensions: Ir3-Cu=2.526 (1) Å, Ir3-P1=2.299 (2) Å, Ir3-C=1.837 (6) Å, Cu-P2=2.187 (1) Å, Cu-B7=2.215 (6) Å, Cu-H7=1.823 (1) Å, C1-C2=1.656 (9) Å, B7-H7=1.245 (6) Å, $\langle B\text{-}B_{facial}\rangle$=1.833 Å, $\langle B\text{-}C_{facial}\rangle$=1.718 Å, Cu-Ir3-P1=97.5 (<1)°, Cu-Ir3-C=90.1 (2)°, P1-Ir3-C=88.5 (3)°, Ir3-Cu-P2=147.9 (<1)°.

The molecular structure of 2,[6] displayed in Figure 1, re-

*Korea Advanced Institute of Science and Technology. Author to whom correspondence should be addressed.

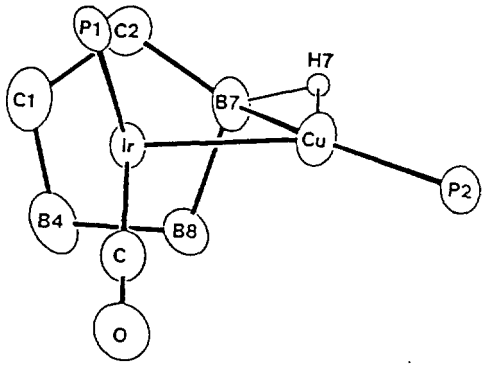

Figure 2. Top view of the metal fragment and the C_2B_3 belt atoms of **2**.

veals that the Ir-Cu bond is bridged by the $C_2B_9H_{11}$ cage such that the dicarbollide is coordinated to the iridium atom in an η^5-fashion while forming a B-Cu η^1-σ bond with an exopolyhedral three-center two-electron B-H-Cu linkage. The latter involves the asymmetric boron atom B(7) in the upper pentagonal face of the C_2B_9 cage. The value of 1.823 Å of the Cu-(μ-H) bond falls into the range of 1.70~2.08 Å observed in copper hydroborate,[7] [9,10-*exo*-{$Cu(PPh_3)_2$}-9,10-(μ-H)$_2$-7,8-*nido*-$C_2B_9H_{10}$],[8] [*closo*-*exo*-4,8-(μ-H)$_2$-4,8-{$Cu(PPh_3)$}-3-PPh_3-3,1,2-$CuC_2B_9H_9$],[9] [Cu_3(μ-H)$_3$($C_2B_9H_9NC_5H_4CO_2$-CH_3)$_3$],[10] and [Mo_2Cu_2(μ-CO)$_4$(CO)$_2$(μ-H)$_2$($C_2B_9H_{10}$)$_2$]]$^{2-}$.[3] IR spectrum of **2**, measured under reduced pressure to avoid an interference owing to the asymmetric stretching (2350 cm^{-1}) of CO_2, reveals very weak and broad band at 2323 cm^{-1}, indicating the presence of B-H-Cu bridging interaction.

The iridium atom exhibits a *pseudo*-octahedral coordination geometry with the dicarbollide ligand occupying three facial coordination sites and three monodentate groups occupying remaining three sites. The projection of Ir, CO, PPh_3, and $Cu(PPh_3)$ on the upper C_2B_3 plane, displayed in Figure 2, shows relative coordination orientation of the groups around Ir atom as well as *closo* nature of C_2B_9Ir cage. The iridium atom disposes approximately above the centroid of the upper C_2B_3 plane of the C_2B_9 cage, giving rise to Ir-C_2B_3 face distance of 1.66 Å. To the best of our knowledge, the Ir-Cu distance of 2.526(1) Å represents the authentic example of heterodinuclear Ir(I)-Cu(I) interatomic separation while the values of Ir(IV)-Cu(0) distances (2.776(4)~2.959(4) Å)[11] are available from the heteronuclear octahedral neutral cluster complex [$Cu_4Ir_2(PPh_3)_2(CCPh)_8$].

IR spectrum of **1** exhibits a carbonyl stretching frequency at 1974 cm^{-1}, which can be informatively compared with the values of 1983 cm^{-1} (in nujol) for [$TlRh(CO)(PPh_3)(C_2B_9$-$H_{11})$][4] and 1910 cm^{-1} of [$Rh(CO)(PPh_3)(C_2B_9H_{11})$]$^-$.[12] The higher carbonyl stretching frequency of **1** is indicative of less electron density around rhodium and thereby less π-back donation to the carbonyl group than in [$Rh(CO)(PPh_3)$ ($C_2B_9H_{11}$)]$^-$. This observation is supportive of the presence of a Rh-Cu interaction in **1** similar to the Ir-Cu bond in **2** since M-Cu interaction leads to the decrease of electron density around M. The carbonyl stretching frequency at 1966 cm^{-1} of **2** is lower than that of **1**, as expected due to the difference between the third and the second low transition metals.

The structural similarity of **1** and **2** indicated by various spectroscopic data and the molecular structure of **2** suggest that both compounds in solid state are lack of symmetry, leading to C_1 symmetry with nine magnetically different boron nuclei. But in solution, the 96.3-MHz $^{11}B\{^1H\}$ NMR spectra[5] of both species consist of five instead of nine distinct resonances, indicating the presence of solution C_s symmetry nature of **1** and **2** driven by a kind of wigwag fluxional motion of exopolyhedral {$Cu(PPh_3)$}$^+$ moiety around the boron atoms of the upper C_2B_3 belt with concomitant position rearrangement of CO and PPh_3 groups although the unlikely occurrence of a coincidental overlap of chemical shifts cannot be ruled out. A similar dynamic process has been previously suggested for other cupracarboranes.[8,9] The observation of single ^{1}H-NMR peak for two different carboranyl CH protons is also consistent with the foregoing C_s solution symmetry. It is interesting to note that the group 11 heavier congener analogue of **2**, [$Ir(CO)(PPh_3)(C_2B_9H_{11})$]{$Ag(PPh_3)$}],[13] shows eight distinct solution boron resonances and two carboranyl CH proton signals.

Currently, variable temperature NMR properties of **1** and **2** and further reactivities of [$TlM(CO)(PPh_3)(C_2B_9H_{11})$] (M = Rh, Ir) toward various halogeno-metal complexes are under investigation.

Acknowledgment. Support of this work by the Korea Science and Engineering Foundation is gratefully acknowledged.

References

1. Kim, J.; Do, Y.; Shon, Y. S.; Knobler, C. B.; Hawthorne, M. F. *J. Organomet. Chem.* **1991**, *418*, C1.
2. Mullica, D. F.; Sappenfield, E. L.; Stone, F. G. A.; Woollam, S. F. *J. Chem. Soc., Dalton Trans.* **1993**, 3559.
3. Do, Y.; Knobler, C. B.; Hawthorne, M. F. *J. Am. Chem. Soc.* **1987**, *109*, 1853.
4. Oh, J. R., Ph. D. Dissertation, University of California, Los Angeles, 1989.
5. Satisfactory elemental analyses were obtained for both compounds. Data for **1**: IR (KBr, 0.20 Torr, cm^{-1}), ν_{BH} 2594 (s), 2549 (s), 2532 (s), and 2519 (s) and ν_{CO} 1974 (vs). No evident peak assignable to ν_{BHCu} was observed. ^{1}H-NMR ($CDCl_3$, ppm), 7.88-7.23 (m, phenyl) and 2.41 (s, carboranyl C*H*). $^{11}B\{^1H\}$ NMR (CH_2Cl_2-10% CD_2Cl_2, referenced to external $BF_3 \cdot OEt_2$, ppm), −11.7, −15.8, −22.6, −23.2, and −25.6. $^{31}P\{^1H\}$ NMR (CH_2Cl_2-10% CD_2Cl_2, referenced to external 85% *aq*. H_3PO_4, ppm), 38.7 (d, $J_{Rh\text{-}P}$ = 151 Hz), and 4.9. Data for **2**: IR (KBr, 0.20 Torr, cm^{-1}), ν_{BH} 2603 (s), 2581 (s), 2565 (s), 2537 (s), 2523 (s) and ν_{BHCu} 2323 (vw, broad) and ν_{CO} 1966 (vs). ^{1}H-NMR ($CDCl_3$, ppm), 7.80-7.28 (m, phenyl) and 2.68 (s, carboranyl C*H*), $^{11}B\{^1H\}$ NMR (CH_2Cl_2-10% CD_2Cl_2), −8.4, −16.5, −17.3, −22.0 and −25.4. $^{31}P\{^1H\}$ NMR (CH_2Cl_2-10% CD_2Cl_2), 19.4 and 4.0.
6. Crystallographic data for **2**: $C_{39}H_{41}B_9CuIrOP_2$, M = 940.8, triclinic, space group $P\bar{1}$, a = 11.602 (2), b = 12.631 (2), c = 16.011 (3) Å, α = 74.91 (1), β = 74.50 (1), γ = 62.96 (1)°, V = 1987.3, Z = 2 (ρ_{calcd} = 1.57 gcm^{-3}), μ = 38.22 cm^{-1}, R (Rw) = 0.031 (0.033) for 4627 observed data [F>6 σ(F)]. The diffraction data of a yellow orange rectangular crystal obtained from a CH_2Cl_2-*n*-pentane solution were collected at 293 K in the ω/2θ scan mode on an Enraf-No-

nius CAD4 diffractometer using Mo K_α radiation to a maximum 2θ value of 50°. The structure was solved with use of the heavy-atom method (SHELXS 86) and blocked-matrix least-squares procedures (SHELX 76) on the CRAY-2S/4-128 supercomputer.
7. Teller, G. R.; Bau, R. *Struct. Bonding* **1981**, *44*, 1.
8. Park, Y.-W.; Kim, J.; Kim, S.; Do, Y. *Chem. Lett.* **1993**, 121.
9. Do, Y.; Kang, H. C.; Knobler, C. B.; Hawthorne, M. F. *Inorg. Chem.* **1987**, *26*, 2348.
10. Kang, H. C.; Do, Y.; Knobler, C. B.; Hawthorne, M. F. *J. Am. Chem. Soc.* **1987**, *109*, 6530.
11. Churchill, M. R.; Bezman, S. A. *Inorg. Chem.* **1974**, *13*, 1418.
12. Walker, J. A.; Knobler, C. B.; Hawthorne, M. F. *Inorg. Chem.* **1985**, *24*, 2688.
13. Park, Y.-W.; Kim, J.; Do, Y. manuscript in preparation.

Anionic Cyclizations of Alkyllithiums to Vinyl Sulfides

Sunggak Kim*, Bo Sung Kim, and Sang Yong Jon

Department of Chemistry
Korea Advanced Institute of Science and Technology, Taejon 305-701, Korea

Received May 24, 1994

Ring-forming reaction is one of the most important operations in organic synthesis and generally involves cationic[1] and radical cyclizations.[2] Much less attention has been given to anionic cyclizations,[3] although a number of recently developed methods employ anionic cyclizations for the construction of 5-membered rings.[4] In anionic cyclizations, an internal electrophilic acceptor should be survived during the generation of a highly reactive carbanion. Alkynes and unactivated alkenes have been normally utilized as electrophilic acceptors. The major advantage of the anionic cyclization over the radical and cationic cyclization may be that it is possible to functionalize the initially formed cyclization product by the reaction with various electrophiles, whereas both trapping the radical intermediate before it abstracts hydrogen atom from tributyltin hydride and the formation of 5-membered ring *via* the cationic intermediate are normally difficult to achieve in a reliable manner.

We have been interested in developing internal electrophiles which could promote anionic cyclizations under mild conditions as well as introduce useful functional groups for further transformations. Since it has been known that the vinyl sulfide showed a good electrophilicity toward organolithium reagents,[5] we have examined whether the vinyl sulfide might be served as the internal electrophile in anionic cyclization reactions.

The anionic cyclization was studied with 6-iodohex-1-enylphenyl sulfide (**1**). **1** was prepared from 6-bromohexanal by routine four-step operations.[6] Reaction of **1** with *t*-butyllithium (2.2 equiv) in deoxygenated diethyl ether at −78℃ would generate **2** which underwent anionic cyclization upon warming to room temperature to afford **4** in 78% yield without the formation of **5** after quenching **3** with methanol. Apparently, the metal-halogen exchange proceeds much faster than proton abstraction from the vinyl sulfide group to afford α-lithiovinylphenyl sulfide anion.[7] It is noteworthy that the cyclization did not occur when the reaction was carried out at −78℃, even though a vinyl sulfide is expected to be a much better electrophilic acceptor than an unactivated alkene. The initially formed cyclization product could be quenched with several electrophiles such as chlorotrimethylsilane and diphenyl disulfide as shown in Scheme I. The isolated yields of the quenched products were relatively low when diphenyl disulfide, benzaldehyde, and ethyl chloroformate were employed as electrophiles. The yields were considerably improved by the addition of TMEDA (2 equiv) to the reaction mixture.[8] In the case of using ethyl chloroformate as an electrophile, *bis*-ethoxycarbonylated compound **7** was isolated in 30% yield along with 30% of **4a** due to the abstraction of the relatively acidic hydrogen in **6** by **3**. The anionic cyclization of 7-iodohept-1-enylphenyl sulfide (**8**) was not successful under the similar conditions, yielding **9** in 10% yield along with the direct quenched product in 71% yield.

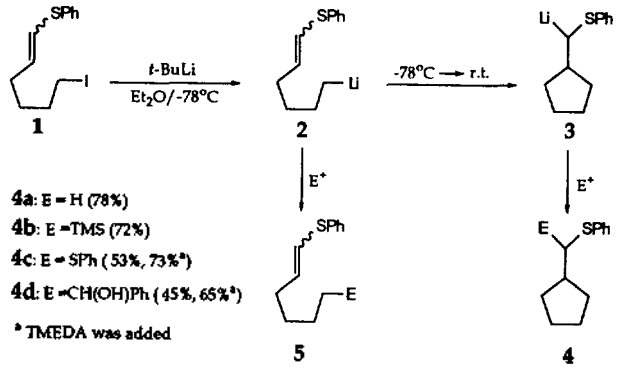

Scheme 1.
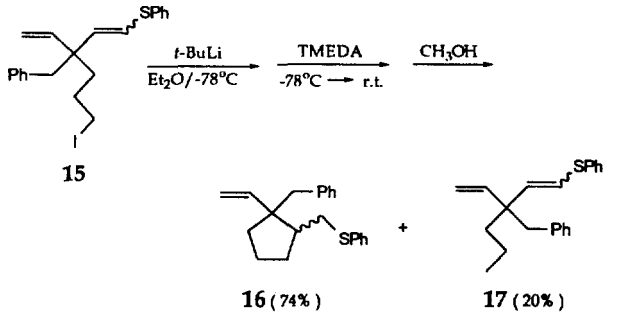
Since the formation of tetrahydrofurans is synthetically useful due to the possible applicability toward natural product synthesis, we briefly studied anionic cyclizations of α-alkoxylithium using a vinyl sulfide as the electrophilic acceptor.[9] To study the anionic cyclization of α-alkoxylithium, we prepared **11** from 2(2-bromo)-ethyl-1,3-dioxolane by a seven-step sequence.[10] Reaction of **11** with *n*-butyllithium in tetrahydrofuran at −78℃ should give **12** which underwent cyclization upon warming the reaction mixture to room tem-