J. Microbiol. Biotechnol. (2014), 24(6), 725–731
http://dx.doi.org/10.4014/jmb.1403.03063

Review

jmb

CTX Prophages in *Vibrio cholerae* O1 Strains

Eun Jin Kim[1,2], Dokyung Lee[1,2], Se Hoon Moon[1,2], Chan Hee Lee[1,2], and Dong Wook Kim[1,2*]

[1]*Department of Pharmacy, College of Pharmacy, Hanyang University, Ansan 426-791, Republic of Korea*
[2]*Institute of Pharmacological Research, Hanyang University, Ansan 426-791, Republic of Korea*

Received: March 31, 2014
Revised: April 9, 2014
Accepted: April 10, 2014

First published online
April 11, 2014

*Corresponding author
Phone: +82-31-400-5806;
Fax: +82-31-400-5958;
E-mail: dongwook@hanyang.ac.kr

pISSN 1017-7825, eISSN 1738-8872

The classical biotype strains of the *Vibrio cholerae* O1 serogroup harbor the biotype-specific cholera-toxin encoding phage (CTX) CTX^{cla}, and the El Tor biotype strains contain CTX-1. Although the classical biotype strains have become extinct, a remnant of classical CTX phage is transferred to the El Tor biotype strains. The prototype El Tor strains, which produce the biotype-specific cholera toxin, are now being replaced by atypical El Tor variant strains producing classical biotype cholera toxin. The genome sequences of the CTX phages in atypical El Tor strains indicate that the CTX phages in atypical El Tor strains are a mosaic of CTX^{cla} and CTX-1. Before the emergence of atypical El Tor stains in the early 1990s, unusual pre-seventh pandemic strains were isolated in the US Gulf Coast between 1973 and 1986. These strains have characteristics of atypical El Tor strains since they are El Tor biotype strains containing CTX^{cla}, yet the genome sequence of this CTX phage indicates that it is different from CTX^{cla} and is therefore classified separately as $CTX^{US\ Gulf}$.

Keywords: *V. cholerae*, atypical El Tor, cholera, cholera toxin

Classification of *V. cholerae* O1 Strains

Seven cholera pandemics have been recognized since the beginning of the 19th century up to present. Although the identity of *V. cholerae* strains responsible for the first five pandemics are not well-known, the *V. cholerae* O1 classical biotype strains and El Tor biotype strains are renowned to have caused the sixth and seventh cholera pandemics, respectively. Strains belonging to each biotype have different characteristics in several microbiological tests [13]. Whole genome sequencing-based phylogenetic analysis shows that the two biotype strains differ by 20,000 SNPs (single nucleotide polymorphisms) and several biotype-specific genomic islands, including VSP (*Vibrio* seventh pandemic island)-1, -2 [5]. In addition, two biotype strains contain biotype-specific cholera toxin phage (CTX) and produce biotype-specific cholera toxin (CT) [13].

The CTX phage genome is composed of 10 genes, *rstR*, *rstA*, *rstB*, *psh* (putative minor coat protein), *cep* (core encoded pilin), *orfU*, *ace* (accessory cholera enterotoxin), *zot* (zonula occludens toxin), and *ctxAB*. RstR, RstA, and RstB are necessary for phage DNA replication and integration, whereas Psh, Cep, OrfU, Ace, and Zot are required for phage packaging and secretion. Ace and Zot are shown to possess enterotoxic activity. CtxA and CtxB are not required for the phage life cycle but encode the cholera toxin.

Classical biotype strains harbor CTX^{cla}, and El Tor biotype strains contain $CTX^{El\ Tor}$ or CTX-1 (Table 1). Two CTX phages differ by the *rstR*, which have entirely different DNA sequences and are therefore classified as $rstR^{cla}$ and $rstR^{El\ Tor}$. Other genes are different between two phages by a number of SNPs. Notably, the *ctxB*s in each CTX phage differ by two amino acids at positions 39 and 68 (nucleotide positions 115 and 203). A global population change of *V. cholerae* O1 serogroup has been recognized, from classical biotype to prototype El Tor biotype [20]. Since the El Tor biotype strains first emerged in 1962, the classical biotype strains have diminished. The classical biotype strains haven not been isolated from cholera patients since the 1980s and are considered to be extinct.

A further population change in El Tor biotype strains had occurred in the 1990s, from the prototype El Tor strains to the atypical El Tor variants producing the *ctxB* of classical biotype. The El Tor biotype strains containing

Table 1. CTX phages in *V. cholerae* O1 strains.

Strain	Biotype	Origin	CTX phage	GenBank Accession No.
O395	Classical	India, 1965	CTX^{cla}	CP000626
N16961	El Tor	Bangladesh, 1975	CTX-1	AE003852
B33	El Tor	Mozambique, 2004	CTX-2	GQ485644
IB4122	El Tor	Vietnam, 2007	CTX-3	GQ485652
IB4642	El Tor	India, 2006	CTX-3b	GQ485651
IB4755	El Tor*	Louisiana, USA, 1986	$CTX^{US\ Gulf}$	KJ619459

*Biotype was determined by the DNA sequence of *tcpA*.

CTX-1 are now referred to as the prototype El Tor to discriminate from atypical El Tor variants producing classical biotype cholera toxin. The atypical strains are reported to have emerged in the early 1990s [20]. As the prototype El Tor strains completely replaced the classical biotype strain globally, the atypical strains also entirely replaced the prototype El Tor strains. No clinical isolates of prototype El Tor strains have been collected since 2000 globally [20]. Two groups of atypical strains are reported based on the unusual classical cholera toxin-encoding CTX phage they harbor. Moreover, another important population change is occurring currently among the atypical strains producing the classical biotype cholera toxin, as they are now being replaced by strains producing a new type of cholera toxin [17]. The increase in number of severe cholera incidence in the Indian subcontinent and the emergence of atypical *V. cholerae* strains were proposed to be associated; however, an exact mechanism correlating the clinical symptoms and genetic changes of the bacterial strains needs to be elucidated [21].

The main cause of the population change from classical biotype to El Tor biotype is believed to be the changes of the genome of the bacteria; namely, the accumulation of SNPs and acquisition of several genomic islands [5, 16]. The genome change within the El Tor biotype strains has been gradual, and only 250 SNPs are identified between prototype and atypical strains; therefore, alternative approaches must be considered in order to explain the population changes of El Tor biotype strains more comprehensively.

Classical Biotype Strains

Classical biotype strains contain biotype-specific CTX phage, CTX^{cla}, which is integrated in both chromosomes of the bacteria [7]. Two classical biotype strains, O395 and 569B, have been studied extensively, and they contain the same CTX phage integration structure [6]. A truncated CTX^{cla} consisting of $rstR^{cla}$, *rstA*, *rstB*, and a partial *cep* followed by an authentic CTX^{cla} are integrated in chromosome 1 of these strains. Another CTX^{cla} is integrated in chromosome 2. This array of CTX phage does not produce progeny phages since the replication of CTX phage requires a CTX repeat or CTX-RS1 array [8]. A number of classical biotype strains have been reported to contain various arrays of CTX^{cla} [2].

Pre-Seventh Pandemic Strains

A few pre-seventh pandemic strains are reported to be phylogenetically located intermediate between the classical and El Tor biotypes [5, 16]. A group of strains collected in Australia in the 1980s and another group of strains collected in the US Gulf Coast in the 1970s and 1980s have been analyzed to be pre-seventh pandemic strains [12, 19]. Although the classical and El Tor biotype strains are believed to originate from Ganges Delta, US Gulf Coast and Australia are reported to be independent reservoirs of region-specific *V. cholerae* strains [12, 19]. The biotype of the pre-seventh pandemic strains was determined as El Tor although they were shown to contain CTX^{cla}. The whole genome sequence of the CTX phage of a US Gulf Coast strain has been recently available ($CTX^{US\ Gulf}$), and the sequence indicates that the CTX phage in this strain should be distinguished from the authentic CTX^{cla} (Table 1).

Wave 1 Seventh Pandemic Strains

The El Tor biotype strains usually produced the biotype-specific cholera toxin, and therefore, are called prototype El Tor strains or Wave 1 strains of the seventh cholera pandemic. El Tor biotype strains also contain a satellite phage, RS1, which contains $rstR^{El\ Tor}$, *rstA*, *rstB*, and *rstC*. RS1 is integrated on either side of CTX-1 on chromosome 1 of El Tor biotype strains; thus various arrays of CTX-1 and RS1 are found in El Tor biotype strains. A CTX repeat or CTX-1-RS1 array allows the CTX phage replication. No prototype El Tor strain contains CTX phage or RS1 on chromosome 2. The type strain of prototype El Tor strains, N16961, contains the CTX-1-RS1 array.

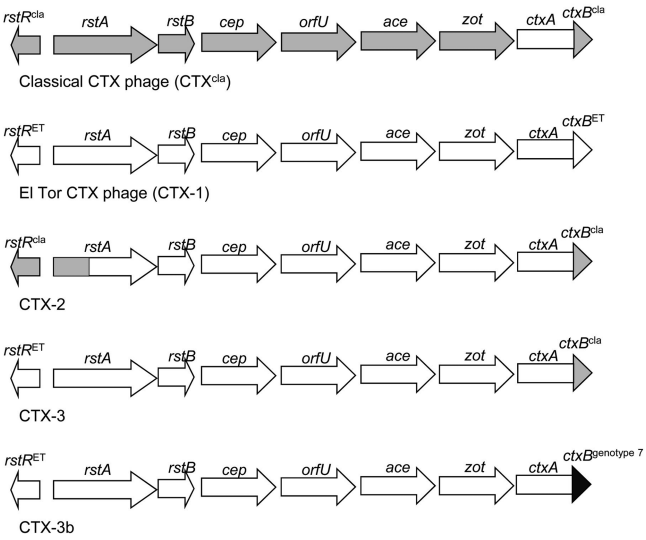

Fig. 1. Genetic structure of CTX phages.

Block arrows indicate the direction of transcription of each gene (not shown to scale). CTX phage genes are shown in grey or white based on the SNPs of CTX^{cla} (grey) or CTX-1 (white). *ctxB* genotype 7 of CTX-3b is shown in black.

Wave 2 Seventh Pandemic Strains

An atypical CTX phage was discovered in *V. cholerae* clinical isolates of cholera outbreaks in Mozambique in 2004 and was later found to have existed in South Asian countries since the early 1990s [1, 15]. This atypical CTX phage contains classical biotype-specific *rstR* (*rstR*^{cla}) and *ctxB* (*ctxB*^{cla}) and was thus considered a CTX^{cla} (Fig. 1). However, this phage was revealed to contain other genes of the CTX-1 and was later renamed CTX-2. The strains containing CTX-2 harbor a tandem repeat of CTX-2 on chromosome 2 and various genetic elements on chromosome 1 and are categorized as Wave 2 strains of the seventh cholera pandemic [16]. Strains containing a repeat of RS1 or CTX-2, or no element on chromosome 1 have been reported [5, 14, 16]. Wave 2 strains have been reported on the Indian subcontinent, Southeast Asia, Papua New Guinea, and Mozambique, indicating they are wide spread [10, 11, 18].

Wave 3 Seventh Pandemic Strains

A cholera outbreak in northern Vietnam, where cholera had not been endemic for decades, caused thousands of cholera cases in late 2007. The cholera outbreak was caused by a Wave 3 strain. Since then, the cholera has been endemic in this area by an expansion of a single strain introduced in 2007 [18, 22]. Wave 3 atypical El Tor strains contain the RS1-CTX array on chromosome 1 and lack an integrate element on chromosome 2. The CTX phage in Wave 3 strains has *rstR*$^{El\ Tor}$ and *ctxB*$^{El\ Tor}$ and is distinguished from CTX-1 of Wave 1 strains and CTX-2 of Wave 2 strains. This CTX phage therefore has been designated as CTX-3 [16]. Strains belonging to Wave 3 have been reported as early as 1991 in India [4]. A derivative of CTX-3 was recognized in 2006, containing the identical DNA sequence as CTX-3, except for the 58th nucleotide of *ctxB*. This *ctxB* is classified as *ctxB* genotype 7 (*ctxB* genotype 1 is of CTX^{cla}, genotype 2 is of an El Tor strain collected in Australia, genotype 3 is of CTX-1, and genotypes 4, 5, and 6 have been reported in O139 strains). Currently, most of the clinical isolates of *V. cholerae* are Wave 3 strains. The cholera outbreak in Haiti in 2010 was reported to be caused by a single introduction of a Wave 3 strain that has the *ctxB* genotype 7 [3].

Table 3. SNPs in *rstR*^{cla} in CTX^{cla}, CTX-2, and CTX$^{US\ Gulf}$.

CTX type	Strain name	*rstR*^{cla}
		45
CTX^{cla}	O395	A
CTX-2	B33	A
CTX$^{US\ Gulf}$	IB4755	G

Sequence Variations in CTX Phages

CTX^{cla}, CTX-1, and RS1

CTX^{cla} and CTX-1 are biotype-specific CTX phages in classical and prototype El Tor strains, respectively. Besides the biotype-specific gene *rstR*, two phages are different by a number of SNPs (Table 2). The SNPs in each phage can be used to identify the origin of CTX phage genomes in atypical *V. cholerae* strains. CTX-1 and RS1 contain three common genes, *rstR*$^{El\ Tor}$, *rstA*, and *rstB*. The *rstR*$^{El\ Tor}$ genes of CTX-1 and RS1 are identical; however, *rstA* and *rstB* have sequence variations between CTX-1 and RS1. The sequence variations of RS1 and CTX-1 are found in nucleotide positions 927, 933, and 942 in *rstA* (Table 3). In

Table 2. Number of SNPs in each gene in CTX^{cla} and CTX-1.

Gene	*rstA* (1,080)	*rstB* (372)	*cep* (249)	*orfU* (1,188)	*ace* (291)	*zot* (1,200)	*ctxA* (777)	*ctxB* (375)
Number of SNPs between CTX^{cla} and CTX-1	10	7	5	57	4	14	0	2

Table 4. SNPs in *rstA* in CTX phages.

CTX type	Strain name	*rstA*																				
		27	36	123	147	162	183	246	258	345	516	540	579	596	609	774	894	927	933	942	1032	1038
CTX^{cla}	O395	T	·	·	·	T	A	·	C	T	A	G	C	·	C	T	·	·	·	·	·	·
	N16961RS1	·	·	·	·	·	·	·	·	·	·	·	·	·	·	·	·	C	T	T	·	·
CTX-1	N16961CTX	C	A	C	G	C	C	A	G	G	G	A	T	G	T	C	T	T	C	G	C	A
CTX-2	B33	T	·	·	·	T	A	·	C	·	·	·	·	·	·	·	·	·	·	·	·	·
CTX-3	IB4122	·	·	·	·	·	·	·	·	·	·	·	·	·	·	·	·	C	T	T	·	·
CTX-3b	IB4642	·	·	·	·	·	·	·	·	·	·	·	·	·	·	·	·	C	T	T	·	·
$CTX^{US\ Gulf}$	IB4755	C	G	T	A	T	C	G	G	G	G	G	C	A	C	C	C	·	·	·	T	G

Dots indicate the identical nucleotides as N16961 and Δ indicates nucleotide(s) deletion.

Table 5. SNPs in *rstB* in CTX phages.

CTX type	Strain name	*rstB*																		
		74	75	76	87	93	105	189	285	288	341	360	364	366	367	368	371	372	379	381
CTX^{cla}	O395	Δ	Δ	Δ	T	C	·	·	G	T	·	·	·	·	·	·	·	·	·	·
	N16961 RS1	Δ	Δ	Δ	T	C	A	G	·	·	·	G	A	Δ	Δ	Δ	Δ	Δ	A	Δ
CTX-1	N16961 CTX	G	T	A	A	T	G	A	A	C	G	A	C	A	C	C	T	T	T	A
CTX-2	B33	Δ	Δ	Δ	T	C	·	·	·	·	T	·	·	·	·	·	·	·	·	·
CTX-3	01.07.VP	·	·	·	·	·	·	·	·	·	·	·	·	·	·	·	·	·	·	·
CTX-3b	IB4642	·	·	·	·	·	·	·	·	·	·	·	·	·	·	·	·	·	·	·
$CTX^{US\ Gulf}$	IB4755	Δ	Δ	Δ	·	·	·	·	G	T	·	·	·	·	·	·	·	·	·	·

addition to the seven SNPs, *rstB* of RS1 is 9 bp shorter than *rstB* of CTX-1 (the 74–76, 366–368, 371–372, and 381st nucleotides are absent in *rstB* of RS1). The sequence variations among CTX^{cla}, CTX-1, and RS1 can be utilized to identify the origin of CTX phages in atypical El Tor strains as described below.

$CTX^{US\ Gulf}$

Although the US Gulf Coast strains can be phylogenetically located between classical and El Tor biotype strains, the biotype of US Gulf Coast strains is clearly determined as El Tor [12, 13]. The CTX phage they harbor was known as CTX^{cla} since it contains $rstR^{cla}$ and $ctxB^{cla}$. The full sequence of the CTX phage of a US Gulf Coast strain reveals that there are many sequence variations between $CTX^{US\ Gulf}$ and CTX^{cla} (Tables 3–9). The $rstR^{cla}$ of $CTX^{US\ Gulf}$ also contains a SNP at the 45th nucleotide position, although it is a synonymous change (Table 3).

CTX-2

CTX-2 was initially considered a CTX^{cla} since it contained $rstR^{cla}$ and $ctxB^{cla}$; however, the SNPs of CTX-2 indicate that it is rather a complex mosaic. The first four SNPs of *rstA* in CTX-2 are identical to those of CTX^{cla}, whereas the other six SNPs are of CTX-1 (Table 4). The first five SNPs of *rstB* in CTX-2 are identical to RS1 and the rest of the *rstB* is the same as that of CTX-1 (Table 5). The rest of the phage genome, except for *ctxB*, is the same as that of CTX-1 (Tables 6–9), indicating that CTX-2 is generated by a complicated process. It could be a mosaic of CTX-1, CTX^{cla}, and RS1 generated by at least two recombination events – one between CTX-1 and RS1 and the other between the CTX phage generated by the first recombination and

Table 6. SNPs in *cep* in CTX phages.

CTX type	Strain name	*cep*					
		45	109	121	180	198	219
CTX^{cla}	O395 CTX	C	A	G	T	A	·
CTX-1	N16961	G	G	A	C	G	C
CTX-2	B33	·	·	·	·	·	·
CTX-3	01.07.VP	·	·	·	·	·	·
CTX-3b	IB4642	·	·	·	·	·	·
$CTX^{US\ Gulf}$	IB4755	·	·	·	·	A	T

Table 7. SNPs in *orfU* in CTX phages.

CTX type	Strain name	*orfU*																				
		54	60-61	187	250	261	361	525	528	540	542-543	546	548	553	564	568-569	576	579-580	582	591	595	597
CTX^{cla}	O395	A	CT	·	A	G	·	·	C	A	AA	G	A	A	A	AA	G	AA	C	A	G	T
CTX-1	N16961	G	CG	G	T	A	T	G	T	G	GT	C	C	G	T	GG	A	GG	G	G	A	C
CTX-2	B33	·	·	·	·	·	·	·	·	·	·	·	·	·	·	·	·	·	·	·	·	·
CTX-3	IB4122	·	·	·	·	·	·	·	·	·	·	·	·	·	·	·	·	·	·	·	·	·
CTX-3b	IB4642	·	·	·	·	·	·	·	·	·	·	·	·	·	·	·	·	·	·	·	·	·
CTX$^{US\ Gulf}$	IB4755	·	TG	C	·	·	A	T	C	·	·	·	·	·	A	AA	·	AA	C	·	·	·

CTX type	Strain name	*orfU*																
		603	610	618	621	630	648	651	653-654	657	665-667	673	676	684-688	690	693-694	697-698	700
CTX^{cla}	O395	C	A	A	·	C	A	C	CT	A	GTT	G	C	TTACC	A	TA	AA	G
CTX-1	N16961	T	T	G	A	A	G	T	AC	T	CGG	T	T	GCTTT	T	CG	CT	A
CTX-2	B33	·	·	·	·	·	·	·	·	·	·	·	·	·	·	·	·	·
CTX-3	IB4122	·	·	·	·	·	·	·	·	·	·	·	·	·	·	·	·	·
CTX-3b	IB4642	·	·	·	·	·	·	·	·	·	·	·	·	·	·	·	·	·
CTX$^{US\ Gulf}$	IB4755	·	·	·	G	C	·	·	·	·	·	·	·	·	·	·	·	·

CTX type	Strain name	*orfU*										
		701	705	723	732	745-746	906	917-918	939	996	1070	1147
CTX^{cla}	O395	C	G	G	T	GT	T	CT	C	T	A	A
CTX-1	N16961	A	C	A	C	AC	T	AA	A	G	C	A
CTX-2	B33	·	·	·	·	·	·	·	·	·	·	·
CTX-3	IB4122	·	·	·	·	·	·	·	·	·	·	·
CTX-3b	IB4642	·	·	·	·	·	·	·	·	·	·	·
CTX$^{US\ Gulf}$	IB4755	·	·	·	·	·	C	CT	·	·	·	G

Table 8. SNPs in *ace* in CTX phages.

CTX type	Strain name	ace			
		15-16	99	184	267
CTX^{cla}	O395	CC	C	T	C
CTX-1	N16961	CA	T	C	T
CTX-2	B33	·	·	·	·
CTX-3	IB4122	·	·	·	·
CTX-3b	IB4642	·	·	·	·
CTX$^{US\ Gulf}$	IB4755	TA	C	·	C

Table 9. SNPs in *zot* and *ctxB* in CTX phages.

CTX type	Strain name	*zot*																					*ctxB*		
		48	135	156	162	198	261	264	299	354	356	366	396	492	528	555	624	772	815	842	1029	1077	58	115	203
CTX^{cla}	O395	C	A	C	A	A	T	·	C	T	·	·	·	G	C	T	C	·	C	C	·	·	·	C	C
CTX-1	N16961	A	G	T	G	T	C	T	T	G	G	G	C	C	T	C	G	A	T	T	C	A	C	T	T
CTX-2	B33	·	·	·	·	·	·	·	·	·	·	·	·	·	·	·	·	·	·	·	·	·	·	C	C
CTX-3	IB4122	·	·	·	·	·	·	·	·	·	·	·	·	·	·	·	·	·	·	·	·	·	·	C	C
CTX-3b	IB4712	·	·	·	·	·	·	·	·	·	·	·	·	·	·	·	·	·	·	·	·	·	A	C	C
CTX$^{US\ Gulf}$	IB4755	·	·	·	A	A	·	C	C	·	A	A	T	A	C	·	·	C	C	·	G	G	·	C	C

CTX^{cla}. However, experimental evidence to explain how the CTX-2 was generated is lacking entirely. Wave 2 atypical strains contain a tandem repeat of CTX-2 on chromosome 2, which can produce the progeny phages according to the replication mechanism of CTX phage. However, Wave 2 strains have been reported to be unable to produce progeny phages *in vitro* [9].

CTX-3 and CTX-3b

CTX-3 was first reported from the cholera outbreaks in Vietnam in 2007 and was thought to contain the same genetic structure and sequence of CTX-1, except for the *ctxB* (Fig. 1) [18]. Strains containing CTX-3 were found to have existed since the early 1990s on the Indian subcontinent [20]. However, detailed sequence analysis shows that three SNPs exist in *rstA* of CTX-3 (Table 4). These SNPs are identical to the SNPs of *rstA* of RS1 compared with CTX-1 (Table 4), implying that CTX is a mosaic between CTX-1 and RS1. CTX-3b was found in India in 2006. In addition to two SNPs of the *ctxB*^{cla} of CTX-3 compared with CTX-1, the CTX-3b contained an additional SNP at the 20th amino acid position [4]. CTX-3b has identical DNA sequence as CTX-3 throughout the genome, indicating that it is a derivative of CTX-3 generated by a point mutation in *ctxB*. Most of the current global clinical isolates of *V. cholerae* are atypical El Tor variants containing CTX-3 or CTX-3b [20], and a recent surveillance study in India shows that strains containing CTX-3b have been gradually replacing strains harboring CTX-3, as isolates containing CTX-3b comprised 93.3% of the total isolates collected in 2011 [17]. Thus far, Wave 3 atypical strains only contain the RS1-CTX array on chromosome 1.

Concluding Remarks

Atypical El Tor strains are now believed to have completely replaced the prototype El Tor strains globally. Genome sequencing and CTX phage analyses show that atypical strains arose from prototype El Tor strains by lateral transfer of *ctxB*^{cla} from classical biotype strains. An understanding of the changes of CTX phages would be the starting point to reveal the driving forces of the population changes of *V. cholerae*.

Acknowledgments

This work was supported by the research fund of Hanyang University (HY-2011-N).

References

1. Ansaruzzaman M, Bhuiyan NA, Nair BG, Sack DA, Lucas M, Deen JL, *et al.* 2004. Cholera in Mozambique, variant of *Vibrio cholerae*. *Emerg. Infect. Dis.* **10:** 2057-2059.
2. Basu A, Mukhopadhyay AK, Garg P, Chakraborty S, Ramamurthy T, Yamasaki S, *et al.* 2000. Diversity in the arrangement of the CTX prophages in classical strains of *Vibrio cholerae* O1. *FEMS Microbiol. Lett.* **182:** 35-40.
3. Chin CS, Sorenson J, Harris JB, Robins WP, Charles RC, Jean-Charles RR, *et al.* 2011. The origin of the Haitian cholera outbreak strain. *N. Engl. J. Med.* **364:** 33-42.
4. Choi SY, Lee JH, Jeon YS, Lee HR, Kim EJ, Ansaruzzaman M, *et al.* 2010. Multilocus variable-number tandem repeat analysis of *Vibrio cholerae* O1 El Tor strains harbouring classical toxin B. *J. Med. Microbiol.* **59:** 763-769.
5. Chun J, Grim CJ, Hasan NA, Lee JH, Choi SY, Haley BJ, *et al.* 2009. Comparative genomics reveals mechanism for short-term and long-term clonal transitions in pandemic *Vibrio cholerae*. *Proc. Natl. Acad. Sci. USA* **106:** 15442-15447.
6. Clark CA, Purins L, Kaewrakon P, Focareta T, Manning PA. 2000. The *Vibrio cholerae* O1 chromosomal integron. *Microbiology* **146:** 2605-2612.
7. Davis BM, Moyer KE, Boyd EF, Waldor MK. 2000. CTX prophages in classical biotype *Vibrio cholerae*: functional phage genes but dysfunctional phage genomes. *J. Bacteriol.* **182:** 6992-6998.
8. Davis BM, Waldor MK. 2000. CTXΦ contains a hybrid genome derived from tandemly integrated elements. *Proc. Natl. Acad. Sci. USA* **97:** 8572-8577.
9. Faruque SM, Tam VC, Chowdhury N, Diraphat P, Dziejman M, Heidelberg JF, *et al.* 2007. Genomic analysis of the Mozambique strain of *Vibrio cholerae* O1 reveals the origin of El Tor strains carrying classical CTX prophage. *Proc. Natl. Acad. Sci. USA* **104:** 5151-5156.
10. Grim CJ, Hasan NA, Taviani E, Haley B, Chun J, Brettin TS, *et al.* 2010. Genome sequence of hybrid *Vibrio cholerae* O1 MJ-1236, B-33, and CIRS101 and comparative genomics with *V. cholerae*. *J. Bacteriol.* **192:** 3524-3533.
11. Horwood PF, Collins D, Jonduo MH, Rosewell A, Dutta SR, Dagina R, *et al.* 2011. Clonal origins of *Vibrio cholerae* O1 El Tor strains, Papua New Guinea, 2009-2011. *Emerg. Infect. Dis.* **17:** 2063-2065.
12. Kaper JB, Bradford HB, Roberts NC, Falkow S. 1982. Molecular epidemiology of *Vibrio cholerae* in the U.S. Gulf Coast. *J. Clin. Microbiol.* **16:** 129-134.
13. Kaper JB, Morris Jr JG, Levine MM. 1995. Cholera. *Clin. Microbiol. Rev.* **8:** 48-86.
14. Lee JH, Choi SY, Jeon YS, Lee HR, Kim EJ, Nguyen BM, *et al.* 2009. Classification of hybrid and altered *Vibrio cholerae* strains by CTX prophage and RS1 element structure. *J. Microbiol.* **47:** 783-788.

15. Lee JH, Han KH, Choi SY, Lucas ME, Mondlane C, Ansaruzzaman M, *et al.* 2006. Multilocus sequence typing (MLST) analysis of *Vibrio cholerae* O1 El Tor isolates from Mozambique that harbour the classical CTX prophage. *J. Med. Microbiol.* **55:** 165-170.
16. Mutreja A, Kim DW, Thomson NR, Connor TR, Lee JH, Kariuki S, *et al.* 2011. Evidence for several waves of global transmission in the seventh cholera pandemic. *Nature* **477:** 462-465.
17. Naha A, Pazhani GP, Ganguly M, Ghosh S, Ramamurthy T, Nandy RK, *et al.* 2012. Development and evaluation of a PCR assay for tracking the emergence and dissemination of Haitian variant *ctxB* in *Vibrio cholerae* O1 strains isolated from Kolkata, India. *J. Clin. Microbiol.* **50:** 1733-1736.
18. Nguyen BM, Lee JH, Cuong NT, Choi SY, Hien NT, Anh DD, *et al.* 2009. Cholera outbreaks caused by an altered *Vibrio cholerae* O1 El Tor biotype strain producing classical cholera toxin B in Vietnam in 2007 to 2008. *J. Clin. Microbiol.* **47:** 1568-1571.
19. Safa A, Bhuiyan NA, Murphy D, Bates J, Nusrin S, Kong RY, *et al.* 2009. Multilocus genetic analysis reveals that the Australian strains of *Vibrio cholerae* O1 are similar to the pre-seventh pandemic strains of the El Tor biotype. *J. Med. Microbiol.* **58:** 105-111.
20. Safa A, Nair GB, Kong RY. 2010. Evolution of new variants of *Vibrio cholerae* O1. *Trends Microbiol.* **18:** 46-54.
21. Siddique AK, Nair GB, Alam M, Sack DA, Huq A, Nizam A, *et al.* 2010. El Tor cholera with severe disease: a new threat to Asia and beyond. *Epidemiol. Infect.* **138:** 347-352.
22. Tran HD, Alam M, Trung NV, Kinh NV, Nguyen HH, Pham VC, *et al.* 2012. Multi-drug resistant *Vibrio cholerae* O1 variant El Tor isolated in northern Vietnam between 2007 and 2010. *J. Med. Microbiol.* **61:** 431-437.