Journal of the Korea Academia-Industrial cooperation Society
Vol. 22, No. 6 pp. 60-66, 2021

https://doi.org/10.5762/KAIS.2021.22.6.60
ISSN 1975-4701 / eISSN 2288-4688

A Study on Shape Optimization of Impregnated Bit

Kwang-Wook Youm
Division of Mechanical and Automotive Engineering, Hanyangcyber University

Impregnated Bit의 형상 최적화에 관한 연구

염광욱
한양사이버대학교 기계자동차공학부

Abstract The core is extracted through drilling and used to evaluate the feasibility of developing mineral resources. To extract the core, a bit is installed in the forefront of the drilling device for drilling. Here, the drill bit receives stress due to direct friction against the ground. In addition, a bit appropriate for the given ground condition should be used due to the possibility of damaging a bit as a result of friction. This paper used a current bit model based on an impregnated bit and analyzed a new bit model that uses a stiffener of similar/disparate materials. The hardness and deflective strength were then evaluated by modeling the shape of impregnated bit through a calculation based on a theoretical formula. Through FEM analysis of the existing model and the new model, the stress and strain calculation results were optimized to minimize the stress and strain with a stress of 1.92 × 107 Pa and a strain of 9.6× 10-5 m/m.

요 약 광물자원의 개발 적합성을 가늠하기 위하여 굴착 장비로 지반 굴착을 통하여 코어를 채취한다. 코어를 채취하기 위해서는 시추장비의 가장 앞부분에 굴착을 위한 비트를 설치하여 직접지반을 굴착한다. 굴착을 진행 중에 드릴 비트는 지반과 직적접인 마찰로 인하여 국부에 응력을 받게 된다. 또한 마찰로 인하여 드릴 비트의 파손이 발생할 수 있기 때문에 지반의 조건에 따라 적합한 비트의 사용이 요구된다. 따라서 본 논문에서는 시추장비에 일반적으로 사용되는 세립비트를 기준으로 현재 개발되어있는 비트의 모델을 이용하여 각각 이종재료와 동종재료의 보강재를 삽입한 새로운 비트 모델의 형상 및 재질을 비교·분석하였다. 그리고 세립비트의 형상을 각각의 형태로 모델링하여 절삭에 필요한 경도 및 항절력을 이론적 수식을 이용하여 계산하여 적합성을 확인하였다. 또한 기존의 모델과 새로운 형태의 설계모델을 Amsys Program을 이용하여 FEM해석을 실시하여 응력과 변형률을 계산한 결과, 응력이 1.92E+7Pa, 변형율 9.6E-5m/m인 응력과 변형율이 최소화된 새로운 모델을 설계하였고 그에 따른 세립비트 형상 및 구조의 최적화 설계를 진행하였다.

Keywords : Impregnated Bit, Modeling, Stiffener, Stress, Strain, FEM Analysis

1. Introduction

Mineral resources are currently an important resource necessary for the development of machinery, electricity, electronics, and various technologies. Therefore, there is a continuous and worldwide interest and investment in mineral resources[1-3]. However, in order to find out feasibility of developing mineral resources, drilling operation based on precise prediction is critical. Drilling operation refers to an operation that extracts and analyzes core in column state buried under the earth, rocks and bedrock. Accordingly, in order to extract core, a bit must be installed in the forefront of the drilling machine in order to drill the ground directly[4-7]. Therefore, a bit is

*Corresponding Author : Kwang-Wook Youm(Hanyangcyber Univ.)
email: youmkwr@hycu.ac.kr
Received February 25, 2021 Revised March 30, 2021
Accepted June 4, 2021 Published June 30, 2021

the most important part in a drilling machine. A bit is then categorized as impregnated bit, surface bit, PCD bit and etc[8-11]. depending on the purpose of drilling and the hardness of the ground. Among them, impregnated bit is used in drilling various ground primarily based on medium-hard/hard rocks. Impregnated bit is the structure grafts metal powder and diamond mixture to a metal body. Density, distribution, protrusion, metal powder content and shape of bit determines cutting power. Accordingly this paper compared the existing bit model with a new one in terms of shape and materials based on impregnated bit[12-14].

Also, the shape of impregnated bit was modeled in experiments to evaluate it hardness and deflective strength needed for cutting and calculation was done based on theoretical formulas. In addition, through FEM interpretation of existing model and new model, shape of impregnated bit was optimized.

2. Shape design of Impregnated bit

Different shapes and properties obtain for impregnated bit depending on the type of ground being drilled. However, in this study, Fig. As shown in Fig. 1, the design was performed based on the impregnated bit shape of a general 8-segment shape. In (A), (B), and (C) of 2, the bits were designed by giving 8-segmented grooves of 11 mm. Model (A) is the basic model and grooves were made to 11mm out of the total length of 13mm without using stiffener. Model (B) had 4mm ring between penetrating the groove of bits without adding AI material stiffener. Finally, in model (C), steel material stiffener was added between grooves from lower bit to the center of the ring of the model (B) up to 3.75mm. The bit designed was consolidated using a method of grafting steel body of internal diameter 36.4mm, external diameter 59.5mm and height 68.5mm steel body. The detailed blue print of each model is as shown in Figure 2.

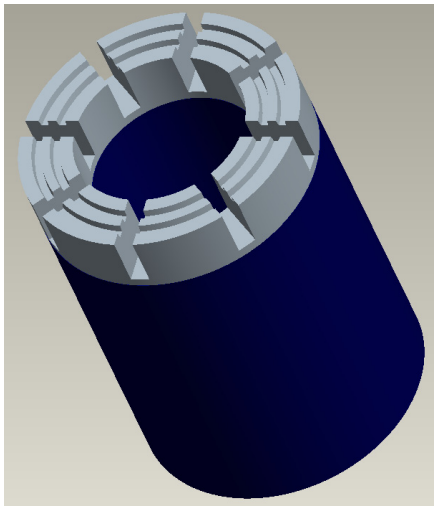

Fig. 1. Shape of impregnated bit

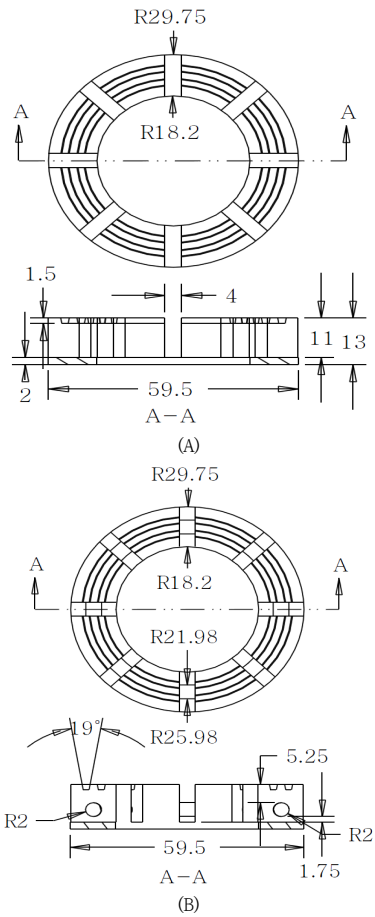

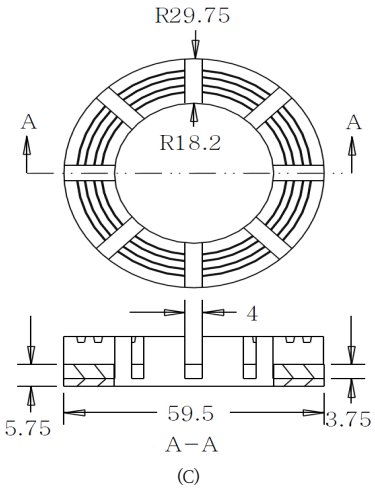

Fig. 2. Design of impregnated bit

3. Characteristic evaluation of Impregnated bit

3.1 Impregnated bit hardness

Fig. 3. Vickers hardness tester

Hardness is an important factor that affects abrasion and cutting properties. Therefore, measuring hardness is an important operation regardless of materials. Although there are many ways to measure hardness but, in this research, Vickers hardness tester as shown in Figure 3 was used to measure hardness. This test method obtained hardness by measuring the pressed-in marks by applying pressure to the specimen using the pressure in the shape of pyramid with the vertical angle of 136°. The hardness is obtained through formula (1); P stands for applied road; A stands for surface area of the mark; and d stands for diagonal distance.

$$H_V = \frac{P}{A} = 1.854\frac{P}{d^2} \quad (1)$$

$$279 = \frac{100}{0.3584} = 1.854\frac{100}{0.8151^2} \quad (2)$$

Here, when the weight P applied to the tester is 100kgf and d is 0.815mm, calculation is done as shown in formula (2) and hardness value comes out 279kg/mm^2.

3.2 Impregnated bit deflective strength

Fig. 4. Universal testing machine

Deflective strength is an important factor where malleability and fragility can be derived. Even the smallest air pore in the material can affect deflective strength. Therefore, deflective strength test was performed using universal testing machine as shown in Figure 4. Deflective strength was obtained from formula (3). Here, P

stands for load during specimen rupture; L, distance that supports specimens; d, specimen width; and h, specimen thickness.

$$T.R.S = \frac{3PL}{2bh^2} \quad (3)$$

$$1248.27 = \frac{3 \times 30 \times 1587.5775}{2 \times 7.3 \times 2.8^2} \quad (4)$$

Here, when the weight during rupture is 1587.5775kgf; L, 30mm; b, 7.3mm; and h, 2.8mm, substituting for formula (4) gives deflective strength of 1248.27kg/mm^2.

4. FEM analysis of Impregnated bit

4.1 Impregnated bit stress analysis

Table 1. Condition of analysis

Unit	a	b	c
Moment(N·m)	118	118	118
Contact condition (B)it to body)	Bonded	Bonded	Bonded
Contact condition (B)it to stiffener)	-	No separation	No separation
Fixed support	bit surface	bit surface	bit surface
Bit material	Structural steel	Structural steel	Structural steel
Body material	Structural steel	Structural steel	Structural steel
Stiffener material	-	Aluminum alloy	Structural steel

Table 2. Material properties of analysis

Unit	Structural steel	Aluminum alloy
Density	7850 kg/m^3	2770kg/m^3
Young's modulus	2E+11 Pa	7.1E+10 Pa
Shear modulus	7.6923E+11 Pa	2.6692E+10 Pa
Bulk modulus	1.6667E+11 Pa	6.9608E+10 Pa
Tensile strength	2.5E+8 Pa	2.8E+8 Pa
Compressive strength	2.5E+8 Pa	2.8E+8 Pa

In order to verify tool characteristics of the impregnated bit designed, drill bit and body contact conditions of 3 model bits were bonded to be identical and the moments were set at 118N·m to proceed with interpretation. Each of other contact conditions and physical values of materials were set as shown in Table 1 and Table 2 and Ansys workbench program was used to implement stress interpretation. Figure 5 shows stress interpretation of each model. The result shows the maximum stress of 2.05E+7Pa in (A), the largest among 3 models, and the minimum stress of 5.0E+5Pa in the side of bit part. In (B), the maximum stress was 1.93E+7Pa, smaller than in model (A), and the place where the minimum stress occurs was the ring-part, the stiffener material. In (C), the maximum stress was 1.92E+7Pa, the smallest among 3 models, and the place where minimum stress occurred was on the side of bit part and stiffener material. In (B) model, the maximum stress declined by 5.83% compared to model (A) and (C) model declined by 6.1%. In addition, in (C) model, the maximum stress declined by 0.3% compared to (B) model. Although the minimum stress value is not important, from the fact that minimum stress occurs in the side of bit and the upper part of stiffener material, it can be concluded that stress distribution was effectively established.

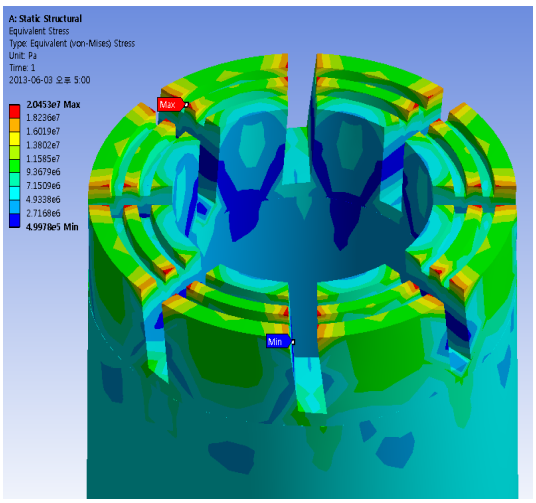

(A)

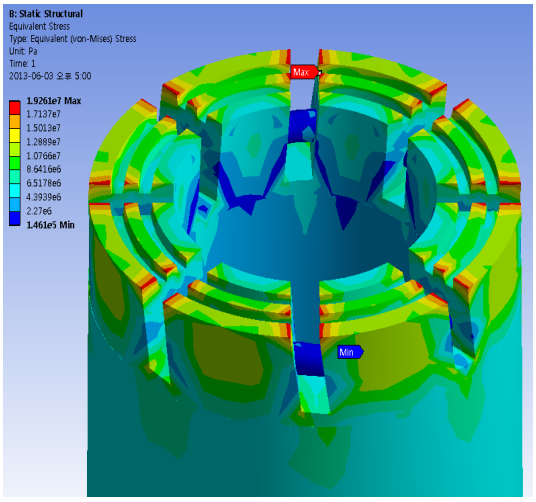

(B)

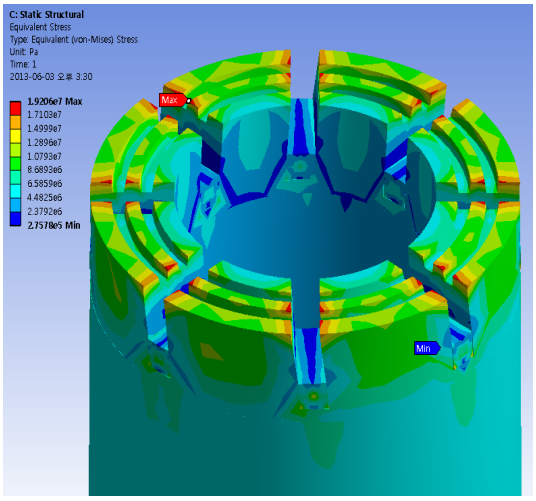

(C)

Fig. 5. Stress analysis of impregnated bit

4.2 Impregnated bit strain analysis

Table 3. Result of analysis

Unit		a	b	c
stress	maximum	2.0453E+7	1.9261E+7	1.9206E+7
	minimum	4.9978E+5	1.461E+5	2.7578E+5
strain	maximum	1.0227E-4	9.6305E-5	9.6031E-5
	minimum	2.4989E-6	2.0577E-6	1.3789E-6

One of the characteristics of bit is that shapes do not change a lot and this makes stable drilling operation possible. Accordingly, stress interpretation and elastic changes of impregnated bit were conducted. Interpretative condition was same as in stress interpretation condition as shown in Table 1 and Table 2. The result of interpretation was that: (A) had elastic change rate of 1.02E-4m/m and (B) showed 9.63E-5m/m. Also, (C) showed 9.60E-5m/m in change rate value. The result of interpreting change rate is shown in Figure 6. Also, the values for stress and change rates are shown in Table 3.

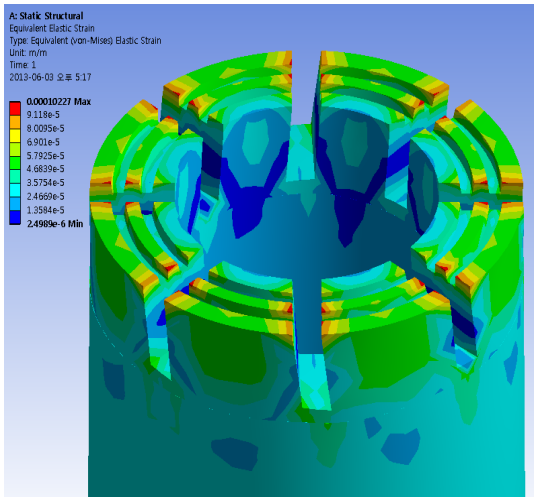

(A)

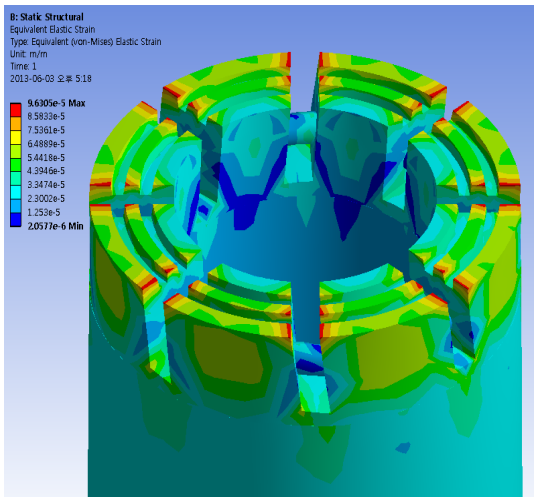

(B)

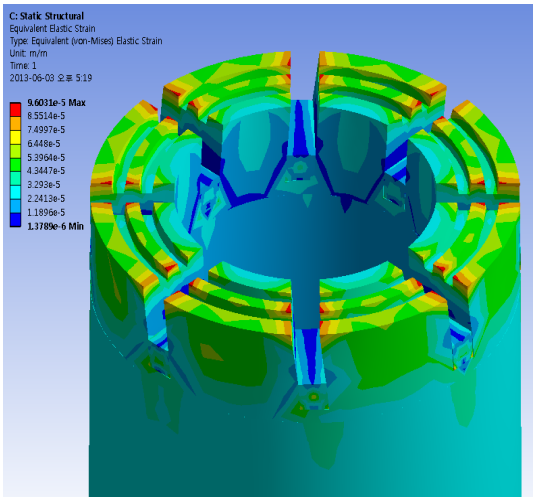

(C)

Fig. 6. Strain analysis of impregnated bit

5. Conclusion

In this study, in order to proceed with the study on the shape optimization of the impregnated bit for ground excavation, the design was carried out in 3 types of the shape of an 8-segmented bit, which is a general model showed the following result.

1) In model (A), the design was done using 13mm as the height of bit as basic shape. In model (B), ring-type stiffener with Φ 4mm and AI materials were used to penetrate the side of bit at 2.75mm height from the bottom part of model (A). In model (C), steel material stiffener were grafted and inserted into the side of bit at 3.75mm height, the center circle of same distance from ring type stiffener.
2) Using the designed bit, the hardness was calculated and a value of about 279kg/mm^2 was obtained, and a value of about 1248.27kg/mm^2 was obtained through the deflective strength calculation.
3) The result shows that, in model (A), the maximum stress of 2.05E+7Pa occurred while the model (B) produced the stress of 1.93E+7Pa, 5.8% decline. In model (C), the stress value of 1.92E+7Pa occurred, which is 6.1% decline fro model (A) and 0.3% decline from model (B).
4) The interpretation of the change rate showed the value of 1.02E-4m/m in model (A) and the value of 9.63E-5m/m in model (B), with about 5.8% decline from model (A). Also, model (C) showed the value of 9.60E-5m/m, showing 6.1% and 0.3% decline compared to model (A) and model (B). The model (C) showed the value of 9.60E-5m/m, 6.1% and 0.3% decline from model (A) and model (B). Therefore, it was confirmed that inserting of stiffener showed decline in both stress and change rates.

We confirmed decline in stress and changes caused by shapes and materials of the inserted stiffener through interpretation program. The result of interpretation showed different stress values according to shapes and materials of stiffener. Among them, the model (C) showed the lowest stress value but model (B) where different materials were grafted showed the similar value. As a result, it is judged that it would be possible to lower the weight using the AI materials with different substances while maintaining mechanical characteristics. However, this research did not consider limitation caused by ground and drilling condition. Therefore, in order to apply to the actual excavation industry, an additional study of the bit considering the heat generation and wear characteristics according to the ground must be conducted.

References

[1] C. H. Song, K. B. Kwon, J. Y. Park, D. Y. Shin, J. W. Cho, "Optimization of Flow Path of Drill Bit Using CFD Simulation", Korean Society for Rock Mechanics Tunnel & Underground space, vol. 22, no. 4, pp.

257-265, 2012.
DOI: http://dx.doi.org/10.7474/TUS.2012.22.4.257

[2] Y. J. Kim, N. S. Woo, J. K. Kwon, S. S. Kim, "A Study on the Drill Riser Behavior for Offshore Drilling System", The Korean Society of Mechanical Engineers Spring Conference paper, pp. 1707-1711, 2012.

[3] S. M. Kim, Y. S. Choi, H. D. Park, "New Outlier Top-Cut Method for Mineral Resource Estimation via 3D Hot Spot Analysis of Borehole Data", minerals, vol. 8, issue. 8, 348, 2018.
DOI: http://dx.doi.org/10.3390/min8080348

[4] J. T. Hong, H. Y. Jeong, S. H. Ahn, C. Y. Joung, "Development of Precision Drilling Machine for the Instrumentation of Nuclear Fuels", Journal of the Korean Society for Precision Engineering, vol. 30, no. 2, pp. 223-230, 2013.
DOI: http://dx.doi.org/10.7736/KSPE.2013.30.2.223

[5] S. C. Jung, K. W. Kim, "A study on Finite element analysis of tool deformation in End Milling", The Korea Academia-Industrial Cooperation Society, vol. 6, no. 1 pp.83-86, 2005.

[6] S. S. Lee, K. Y. Kim, H. S. Shin, "Development of Round Trip Occurrence Simulator Considering Tooth Wear of Drill Bit", Korean Society for Rock Mechanics Tunnel & Underground space, vol. 23, no. 6 pp.480-492, 2013.
DOI: http://dx.doi.org/10.7474/TUS.2013.23.6.480

[7] K. B Kwon, C. H. Song, J. W. Lee, J. Y. Park, J. Y. Oh, J. W. Cho, "Drilling efficiency investigation of a drill bit by piston-drop test", The Korea Fluid Power Systems Society Conference Paper, pp. 15-20, 2013.

[8] P. Santiago, K. Murat, P. Frederic, "Development of a Tool Condition Monitoring System for Impregnated Diamond Bits in Rock Drilling Applications", Rock Mechanics & Rock Engineering, vol. 50, no. 5, pp. 1289-1301, 2017.
DOI: http://dx.doi.org/10.1007/s00603-016-1150-6

[9] S. J. Heo, "Wear Mechanism and Machinability of PCD Tool in Turning Tungsten Carbides", Journal of the Korean Society of Manufacturing Technology Engineers, vol. 22, no. 1, pp. 85-91, 2013.
DOI: http://dx.doi.org/10.7735/ksmte.2013.22.1.85

[10] K. b. Kwon, C. h. Song, J. Y. Park, D. Y. Shin, J. W. Cho, S. H. Cho, 2013, "Rock Fragmentation Assessment of a Drill Bit by Hopkinson Bar Percussion Test", Korean Society for Rock Mechanics Tunnel & Underground space, vol. 23, no. 1 pp. 42-53, 2013.

[11] Y. Shinmoto, K. Wada, "Experimental Study on Drilling Efficiency using Various Core Bits and a Quantification of the Core Sample Conditions", Annual Conference and General Assembly of Korean Society for Rock Mechanics, pp. 75-82, 2009.

[12] K. B. Kwon, C. H. Song, J. Y. Park, J. Y. Oh, J. W. Lee, J. W. Cho, "Evaluation of drilling efficiency by percussion testing of a drill bit with new button arrangement", International Journal of Precision Engineering and Manufacturing, vol. 15, issue. 6, pp. 1063-1068, 2014.
DOI: http://dx.doi.org/10.1007/s12541-014-0437-3

[13] J. Y. Oh, G. H. Lee, H. S. Kang, C. S. Song, "Modeling and performance analysis of rock drill drifters for rock stiffness", International Journal of Precision Engineering and Manufacturing, vol. 13, issue. 12, pp. 2187-2193, 2012.
DOI: http://dx.doi.org/10.1007/s12541-012-0290-1

[14] Z. Xiaojun, Li. Jingyi, Duan. Longchen, Tan. Songcheng, Fang. Xiaohong, "Effect of Fe-based pre-alloyed powder on the microstructure and holding strength of impregnated diamond bit matrix", International Journal of Refractory Metals & Hard Materials, vol. 79, pp. 115-122, 2019.
DOI: http://dx.doi.org/10.1016/j.ijrmhm.2018.11.015

Kwang-Wook Youmg [Regular member]

- Aug. 2010 : Chungang Univ., Mechanical engineering, MS
- Aug. 2014 : Chungang Univ., Mechanical engineering, PhD
- Mar. 2014 ~ Aug. 2018 : Dongju univ., Dept. of automotive&mechanical engineering, Professor
- Sep. 2018 ~ current : Hanyangcyber Univ., Dept. of mechanical and automotive engineering, Professor

〈Research Interests〉
Automotive structure, Transmission Design, EV system