Journal of Korea Multimedia Society Vol. 24, No. 9, September 2021(pp.1299-1310)
https://doi.org/10.9717/kmms.2021.24.9.1299

Research on the Components of Children's Educational Game Achievement System

Kun Shi†, Dong Min Cho††

ABSTRACT

Under the background of the rapid development of digital educational games, we have to evidently research the elements of the achievement system of children's DEG (Digital Educational Game), and analyze the relations between the elements and make a profound study on the achievement system and its components on the impact of player's attitude. Compared with the existing research, the research contents and methods are innovative and reliable. The results show that players have a positive attitude towards the DEG achievement system, DEG achievement system has important value and role for educational games. Which is made of five elements: symbol, reward, logic, social interaction, and knowledge. The five elements interact with each other and have a positive impact on players' attitudes. DEG achievement system with five elements will bring players a positive experience. These findings provide a detailed study of the components of the achievement system. With all of these, we can explain the role and relationship of the components, and provide new ideas and empirical evidence for the design and development of children's educational game achievement system. The above findings provide a detailed description of the components of the DEG achievement system, explain the role and value of each component, and the relationships and patterns among the components, it provides a new perspective and empirical evidence for the design and development of the children's system DEG results.

Key words: Digital Educational Games, Game Achievement System, Children, Player's Attitude, Game Experience, Learning

1. INTRODUCTION

1.1 Background of the study

The global market of Digital educational games (DEG) will reach US $24 billion in 2024, and the Chinese market will reach RMB 33.62 billion to become the largest DEG market in the world Fig. 1. At the same time, DEG has become a necessary part of children's lives, learning, and entertainment [1]. The global market of DEG has entered a boom period According to Piaget's theory of cognitive development stage, in the middle stage of childhood (6-12 years old), children's abstract ability and concentration ability are limited, and their self-control ability is weak. DEG has incomparable advantages in improving the above problems and learning quality compared with traditional education. Among them, DEG's achievement systemis a tool to balance entertainment and learning. We can never overlook its value and advantages in improving game experience, prolonging the game retention rate, and improving learning.

1.2 Research Questions

At present, the research and design of children's DEG achievement systems are seriously lagging behind. Most of them are simple copies of successful commercial entertainment game achievement

※ Corresponding Author : Dong-Min Cho, Address: (54896) 567, Baekje-daero, Deokjin-gu, Jeonju-si, Jeollabuk-do, Korea, TEL : FAX : +82-63-270-3755, E-mail : mellgipson@daum.net
Receipt date : Jun. 4, 2021, Revision date : Sep. 10, 2021
Approval date : Sep. 15, 2021
†† Dept. of Design & Manufacturing Engineering, Jeonbuk National University
(E-mail : 147338536@qq.com)
†† Dept. of Industrial Design, Jeonbuk National University

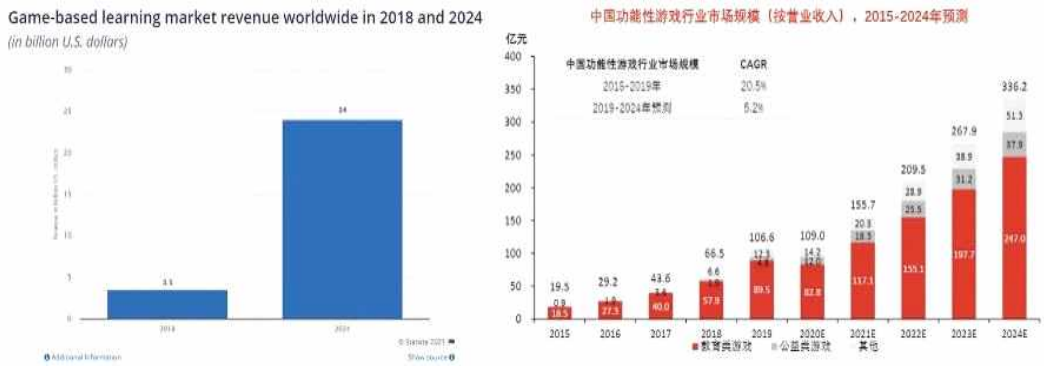

Fig. 1. Global and Chinese Educational Games Market.

systems, which led to poor applicability and experience in DEG and affect the quality of learning. Existing research on game achievement systems, there is a lack of targeted research on educational games, user groups with different characteristics (Galli, Luca, Achievement Systems Explained) [2]. This thesis is an in-depth and specific study of the achievement system with educational games for children aged 6-12 in China, with a higher reference value. Existing studies have conducted some research on digital badges, rewards, in educational games (McDaniel, Rudy, Building Better Digital Badges: Pairing Completion Logic With Psychological Factors) [3], (Groening, Christopher, "Achievement unlocked!" - The impact of digital achievements as a gamification element on motivation and performance) [4], However, there is a lack of in-depth research on achievement system, confusion in the definition of achievement system of digital educational games, and confusion in the concept of achievement system. In this paper, the definition, functions, values, components, and interactions, and relationships among the components of the achievement system are studied in-depth, and a clear view is presented. The application of gamification in education has been explored in existing studies (Rouse, Kelly Elizabeth, Gamification in Science Education: The Relationship of Educational Games to Motivation and Achievement) [5]. However, it is too limited and ignores the integrity and independence of educational games. The research in this paper emphasizes the value and role of achievement systems in educational play settings, with broader applicability and reference value. Most of the existing studies on game achievement systems are based on case studies (Xbox 360 Achievements help boost review scores & sales) [6], the normative research approach is dominant, and empirical research on the components of achievement systems is lacking. This thesis adopts an empirical research method to study the achievement system, and the results are more innovative and valid Fig. 2.

1.3 Purpose and necessity of the study

Purpose of the study: (1) To propose components of a child DEG achievement system through empirical research and to verify the reliability and validity of the components. (2) Analyze and explore the correlations, mechanisms, and patterns of interactions among the constituent elements of the DEG achievement system. (3) Study the relationship between the DEG achievement system and users' attitudes, and the influence of achievement system components on users' attitudes. The methods of the research fill the research gap in this field, correct the wrong views, and provides empirical evidence. It is of guiding significance to the design and research of the achievement system of educational games.

Fig. 2. Comparison of commercial game achievement system and educational game achievement system.

1.4 Research Methods

The overall structure of the thesis is divided into several parts, such as introduction, theoretical study, empirical analysis, and conclusion. Problems in the design of educational game achievement systems are identified through background analysis and theoretical research. By extracting achievement elements from the achievement systems of representative commercial digital entertainment games, Collect and extract the representative elements. Combined with literature analysis and expert interviews, the research method of influencing factors of children's digital educational game achievement system is proposed. Literature analysis and expert interviews were conducted to form a questionnaire, and the investigators adopted the interviewing method, a questionnaire survey was conducted among Chinese primary school children aged 6-12. After retrieving the data, an empirical analysis was conducted, through exploratory factor analysis, correlation analysis, multiple linear regression analysis, empirical analysis of the results, the final conclusion Fig. 3.

2. LITERATURE REVIEW

2.1 Digital Education Games for Children

Digital Education Games (DEG) is a game used for educational purposes [7]. DEG contains both learning and game mechanics that can provide enjoyment and an active learning environment and it is considered the most promising and effective learning tool today [8-11]. A large number of research shows that DEG has enhanced students' learning motivation, brought changes in their learning attitude and behavior, and improved their

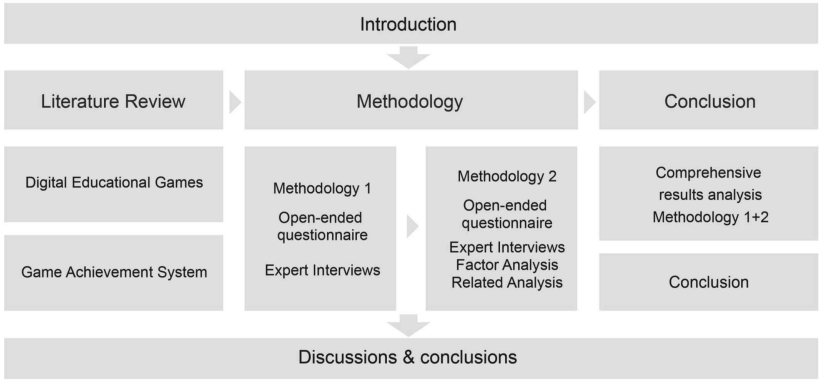

Fig. 3. Thesis Research Pathway Map.

learning efficiency and learning performance. The children's DEG is a learning tool developed specifically for child users, which combines entertainment and learning to make children interested. So, it is regarded as the best way to stimulate children' s learning motivation [12-13].

2.2 The Game Achievement System

Achievement is a set of tasks defined by the game designer where the player can be rewarded by completing or reaching some state to reach a milestone and track the progress [14]. Achievement system is part of game, entertainment platforms, demonstrating, managing and sharing achievement across multiple systems [15]. The achievement system enriches the gameplay and game tasks and it is proved to be a way to extend the game life. Players use different gameplay and difficulties to complete different achievements. The rewards are different so that they can produce different experiences and reduce development costs [16]. The record in the achievement system preserves the player's memory during the game experience, enabling the players to have emotional resonance and attachment. Also, the player loyalty of the game and the attraction of the game are improved. Sharing and showing off game achievements with other players in the social process will also bring players' satisfaction and confidence, extending player retention and reputation for the game [17]. Achievement system is closely related to the player's action performance, enthusiasm and attitude.

3. METHODOLOGY

3.1 Methodology 1

3.1.1 Research Questions

Analyze and extract the achievements projects in the representative game achievement system, and extract the most representative achievement projects.

3.1.2 Participants

516 senior gamers were surveyed about the relevance of game genre and game achievement system, and 505 valid questionnaires were returned. 15 experts participated in the interview and review.

3.1.3 Research and Procedures

The representative game type analysis questionnaire of the game achievement system used is composed of 4 (SQ) questions and 6 questions for research purposes. From the analysis of data of the questionnaires we found that the game types that players consider having a mature, sophisticated achievement system are MOBA, MMORPG, ARPG Fig. 4. According to Superdata global game ranking, IGN best game ranking in the last decade, IOS and Google Play game download ranking, we selected 9 famous games to analyze the achievement projects in the achievement system. Representative items of achievement were extracted by means of expert interviews Table 1.

Through expert interviews, the 183 extracted game achievement elements were classified and screened, and achievement items with similar functions and attributes were categorized under the same category based on expert opinions, forming 28 representative game achievement system items Table 2.

3.2 Methodology 2

3.2.1 Research Questions

To determine the questionnaire questions; To empirically study the components of the DEG achievement system; To analyze the relationship be-

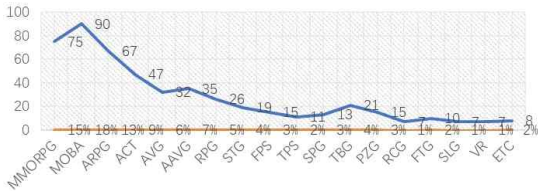

Fig. 4. Achievement system representative game type.

Table 1. Analysis of the achievement items in the game.

Type	Name	Game Achievements
MOBA	League of Legends	Platoon, Glory, Points, Experience, Gold, Trophy, Banner, Rank, Eternal Star Tablet, Hero, Skin, Material, Icon, Rune, Shard, Essence, Gem, Treasure Chest, Key, Kill, Mending, Tower Push, Battle Team, Friend.
	DOTA2	Points, Shards, Equipment, Heroes, Titles, Badges, Leaderboards, Skills, Money, Trophies, Guilds, Tournaments, Contracts, Challenges, Rewards, Careers, Treasures, Treasure Chests.
	Honor of Kings	Gold, Inscription, Level, Title, Hero, Skin, Decoration, Kill, Mending, Tower Push, Challenge, Martial Arts Conference, Six Kingdoms Expedition, Battle Team, Friends, Ranking, Ranking
MMORPG	World of Warcraft	Level, Character, Consumables, PVP: Arena, Battlefield, World PVP, Copies, Expertise, Life Skills, Quests, World Events, Quest, Prestige, General, Glory Deeds, Medals, Titles, Equipment, Mounts, Badges, Mounts, Small Pets, Titles, Heroic List, Inscriptions, Gold, Total Damage, Emotional Enrichment, Monuments, Drawings Unlocked, Treasure Chests, Followers, Arena, Honorable Kills Friendship, Battlegroup, Travel
	Final Fantasy	Total achievement, currency, title, trophy, level, experience value, combat, adventure, crusade, mission, hunt, treasure hunt, matchmaking, ranking, arena, character, playground, props, currency, decomposition, collectibles, magic crystals, weapons, equipment, all-profession common, profession, activity, quest, quest notes, copy quest
	DNF	Level, copy, equipment, pet, stone, medal, gold, point, resurrection coin, win, consumable, material, side business, mission, intimacy value, union, ranking, title, skill, fashion, social
ARPG	The Witcher 3 Wild Hunt	Level, quests, money, skills, magic potion recipes, equipment, experience value, badges, recruiting teammates, hunting commission, tournaments, quintessential cards, drawings, illustrations, medals, runes, blueprints, raw materials
	Monster Hunter: World	Title, trophy, leaderboard, weapon, equipment, level, prop, hunter notes, pet, mission, bonus, guild, history, points, gold
	Devil May Cry	Titles, skills, trophies, leaderboards, equipment, levels, props, costumes, missions, bonuses

Table 2. Typical achievement items in the game.

Typical items of game achievement system
Quest, level, title, skill, copy, kill, point, point, experience, total achievement, money, badge, trophy, weapon, equipment, flag, character, pet, skin, treasure, treasure chest, material, decoration, rune, battle record, ranking, evaluation, battle team

tween elements; To research the relationship between the achievement system and the components and the user's attitude towards the necessity of the achievement system.

3.2.2 Participants

The participants were 220 children (aged 6-12) from China, 105 boys and 107 girls, and eventually recovered 212 valid samples.

3.3 Research and Procedures

According to the literature and expert opinions, we added "knowledge" elements to measure the questions and form questionnaires. The inves-

tigators were doing accessible surveys and extracted data through SPSS22.0 and exploratory factor analysis to extract the elements and correlation of components; Then we used Multivariate linear regression analysis to research the influence on the user's attitude towards achievement system caused by the elements.

4. RESULT

4.1 Exploratory factor analysis

The results are shown in figure 8. KMO=0.944> 0.6, Sig=0.000<0.01. The data is suitable for factor analysis. We use main component analysis of sample data and select the extraction factor with characteristic value greater than 1. Table 3 shows that a total of 5 factors are extracted and the cumulative interpretation variance is 67.308%.

The variance maximizes orthogonal rotation and determine the subordinate dimension of each index. We arrange with cancellation coefficient absolute value less than 0.5 as shown in Table 4.

According to the theory of relevant scholars, each index item can only load more than 0.5 in one common factor but not in other public factors other wise abandoned. In this main component analysis, 5 factors were extracted, and the five factors were named "symbols", "rewards", "logic", "social" and "knowledge". 27 questions are in total after the deletion of non - conforming questions.

4.2 Reliability test

The results in Table 5 show that the Cronbach's α coefficient of each variable is greater than 0.7, indicating that the revised scales have a good reliability.

4.3 Validity inspection

We used the AMOS software to test the structural validity of the questionnaire and examine the matching degree of the theoretical model and the survey data. First, with validation factor analysis,5 factors "symbol, reward, logic, social, knowledge" were examined. Then we used maximum likelihood methods to finish model estimation. The results are shown in Fig. 5.

As can be seen from the above table that the factors of "symbol, reward, logic, social and knowledge", the standardized factor load of the verification factor analysis are greater than 0.5, indicating that the effect is good Table 6.

The evaluation indicators in Table 7 show the data fitness of the five factors models, "Symbol, Reward, Logic, Social, Knowledge", with the ratio of freedom X^2/df are that symbol = 2.469, reward = 2.064, logical = 2.376, social = 2.989, knowledge = 1.172, all less than 5.The absolute fitting index GFI are that symbol = 0.965, Reward = 0.981, Logic = 0.976, Social = 0.965, Knowledge = 0.989, all greater than 9. The relative fitting index CFI are

Table 3. Total variance explained.

Total variance explained									
Ingredients	Initial Eigenvalue			Extraction of the sum of squares of loads			Sum of squared rotating loads		
	Total	Percentage of variance	Cumulative %	Total	Percentage of variance	Cumulative %	Total	Percentage of variance	Cumulative %
1	13.017	48.212	48.212	13.017	48.212	48.212	3.835	14.206	14.206
2	1.662	6.156	54.368	1.662	6.156	54.368	3.827	14.174	28.379
3	1.263	4.679	59.047	1.263	4.679	59.047	3.756	13.912	42.291
4	1.171	4.338	63.384	1.171	4.338	63.384	3.498	12.955	55.245
5	1.059	3.923	67.308	1.059	3.923	67.308	3.257	12.063	67.308
6	The following features are omitted if they are less than 1.								

Table 4. Factor load of DEG achievement elements.

Factor	Title	Questionnaire title	Composition					cronbach alpha
			Factor 1	Factor 2	Factor 3	Factor 4	Factor 5	
Symbols	A3	Always want to dress up when playing games	0.769					.873
	A2	I want to get more badges when playing the game	0.723					
	A4	The game makes me happy to choose the role I like	0.675					
	A1	When playing the game I want to get a more advanced title	0.618					
	A6	I will collect all kinds of beautiful clothes and equipment in the game	0.605					
	A5	The different flags and decorations in the game attract me to play the game	0.604					
Social	D2	I want to play better than my classmates (games)		0.716				.903
	D1	I like to play games with my friends		0.707				
	D6	In the game I hope people appreciate me		0.648				
	D3	It's fun to show other people the games I play		0.620				
	D4	I want to tell my classmates where to play in the game		0.619				
	D5	I want to tell my classmates that I play games very well		0.619				
Rewards	B4	I want to get more money (gold) in the game			0.766			.903
	B3	The game is happy to get treasures (gems, treasure chests)			0.724			
	B5	I want to get the first place trophy in the game			0.711			
	B2	I want to have higher experience in the game			0.646			
	B1	I want to get a higher bonus score in the game			0.633			
Knowledge	E1	Learning from the game makes me happy				0.730		.875
	E4	When you don't play the game, you also think about the knowledge in the game				0.681		
	E2	Play the game learned a lot of interesting things				0.673		
	E3	Learning knowledge in the game is not tired at all				0.662		
	E5	Learning knowledge if all can be done in the game will be great				0.646		
Logic	C5	When playing the game, know how to play to be interesting					0.751	.833
	C2	I like the game I will play again and again					0.698	
	C1	Find a way to complete the game tasks I will be very open					0.645	
	C4	Each level in the game is different to be interesting					0.609	
	C3	The skills in the game make the game fun					0.583	
Intrinsic value			13.017	1.662	1.263	1.171	1.059	
Variance explanation rate			14.206	28.379	42.291	55.245	67.308	
KMO			0.944					
Bartlett's Test of Sphericity			Approximate cardinality				3844.660	
			df				351	
			Sig				0.000	

Table 5. Reliability Testing.

Variable	Symbols	Rewards	Logic	Social	Knowledge
measurable variables	6	4	5	6	5
Cronbach's α	0.873	0.903	0.833	0.903	0.875

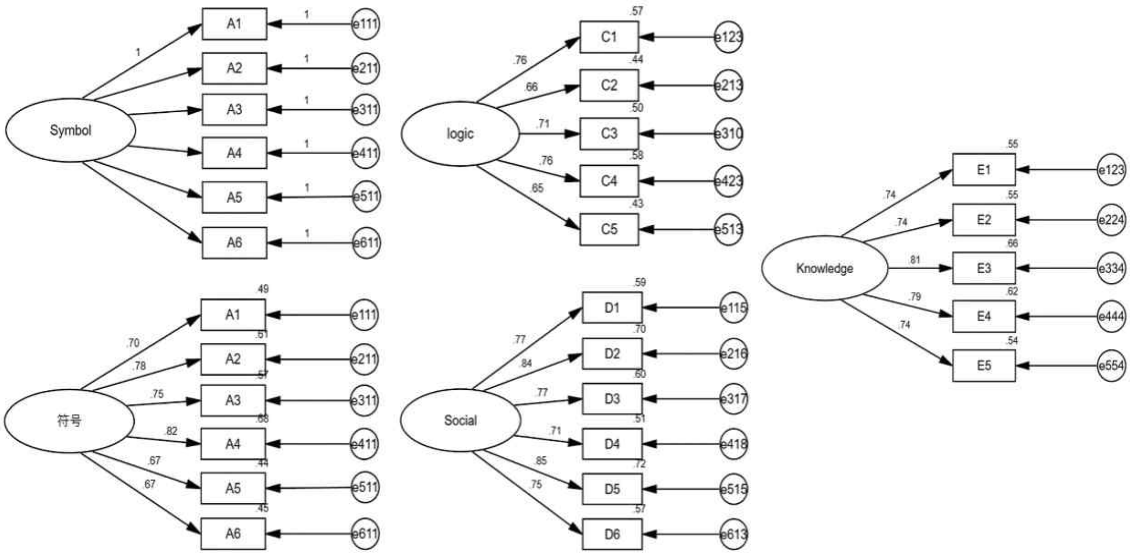

Fig. 5. Validation Factor Analysis on Structural Equation Model.

symbol = 0.976, Reward = 0.992, Logic = 0.981, Social = 0.976, Knowledge = 0.998, all greater than 0.9. RMSEA are symbol = 0.083, Reward = 0.071, Logic = 0.081, Social = 0.097, Knowledge = 0.029, less than 0.10 and CR values greater than 0.7. The factors have high factor convergence and AVE value is greater than 0.5. The evaluation indicators meet the requirements, indicating that the symbol, reward, logic, social and knowledge models fit the data well, and the scale has good structural validity.

4.4 Relevant analysis among various elements

Symbol, reward, logic, social and knowledge factors show 0.01 level significance between the player's attitude to achievement system respectively, and the correlation coefficient values are greater than 0.4, indicating that these five factors have significant positive correlation between the relationship and attitude and the factors have strong correlation. Among them, the necessity attitude of achievement system and symbol and social is the closest relationship (r=.724** \ r=.737**). At the same time, there is also a significant positive correlation between the factors. Social and Reward present the closest relationship (r=.729 **). Knowledge and rewards also presented closely related (r=.705**), other factors are also closely related Table 8.

The analysis found that adjusting R^2 is 0.666, indicating that the 5 factors can explain the reason why sample necessity attitude have changed 66.6 %. Model P = 0.000, F = 84.979, P value of 5 factors are less than 0.05 and significantly indicate that 5 factors will affect the necessity attitude of achievement system. The B value of regression coefficient is greater than 0, indicating that 5 factors will have positive impact on the necessity attitude of achievement system Table 9.

Table 6. Factor loading coefficients for each of the 5 factor questions.

	Estimate		Estimate		Estimate		Estimate		Estimate
A1 <--Symbol	.703	B1 <--reward	.751	C1 <--Logic	.756	D1 <--Social	.767	E1 <--Knowledge	.739
A2 <--Symbol	.782	B2 <--reward	.800	C2 <--Logic	.661	D2 <--Social	.840	E2 <--Knowledge	.738
A3 <--Symbol	.754	B3 <--reward	.841	C3 <--Logic	.707	D3 <--Social	.772	E3 <--Knowledge	.807
A4 <--Symbol	.823	B4 <--reward	.820	C4 <--Logic	.760	D4 <--Social	.711	E4 <--Knowledge	.791
A5 <--Symbol	.665			C5 <--Logic	.654	D5 <--Social	.849	E5 <--Knowledge	.738
A6 <--Symbol	.668					D6 <--Social	.755		

Table 7. Factors validity.

Fitting index	x^2/df	RMSEA	GFI	CFI	TLI	CR	AVE
Symbols	2.469	.083	.965	.976	.961	.823	.540
Rewards	2.064	.071	.981	.992	.983	.940	.653
Logic	2.376	.081	.979	.981	.962	.834	.503
Social	2.989	.097	.965	.976	.959	.905	.614
Knowledge	1.172	.029	.989	.998	.996	.874	.583

Table 8. Correlation analysis.

Relevance						
Elements	Attitude	Symbols	Rewards	Logic	Social	Knowledge
Attitude system attitude	1					
Symbols	.724**	1				
Rewards	.698**	.658**	1			
Logic	.655**	.663**	.578**	1		
Social	.737**	.690**	.729**	.672**	1	
Knowledge	.684**	.645**	.705**	.616**	.693**	1

**. At the 0.01 level (two-tailed), the correlation is significant.

Table 9. Summary of multiple linear regression analysis.

Y	X	Unstandardized Coefficients standardized coefficient		Standardized Coefficients	t	P	R^2	Adjusted R Square	F
		B	Std. Error	Beta					
Achievement system use attitude	(Constant)	30.195	2.645	-	11.418	0.000	0.673	0.666	84.979
	Symbols	3.998	0.941	0.265	4.247	0.000			
	Rewards	2.658	1.026	0.168	2.590	0.010			
	Logic	2.294	1.061	0.127	2.162	0.032			
	Social	3.466	0.977	0.244	3.548	0.000			
	Knowledge	2.416	1.030	0.148	2.346	0.020			

5. DISCUSSIONS & CONCLUSIONS

5.1 Conclusions

Through literature analysis, case analysis, expert interview and empirical research, we evidently extracted and researched the elements of Children's DEG achievement system and they presented good reliability and validity. Relevant analysis found the relationship and role between the elements. Regression analysis found that the achievement system and composition elements are positively related to the player attitude. Conclusion is as follows:

(1) The components of Children's DEG achievement system are "symbol", "reward", "logic", "social" and "knowledge",which meet the expected views of literature research and expert interviews and they can be explained by the comprehensive theory of motivation. Symbol and reward can bring external motivation to gamers. Knowledge can bring inside motivation to gamers and social is the bridge of connection. Through appropriate logical methods, they can improve the game experience, and will influence and improve the learning attitude, motivation, effectiveness. The composition of children's DEG achievement system has high reference value for the design and development and theoretical research of educational games.

(2) We can see the necessity and value of DEG achievement system since the players have a positive attitude towards it. The achievement system composition has a significant positive impact on the player attitude, indicating that the children's DEG achievement system can bring a better user experience, enhance the use motivation, and attract players to use. The five factors are closely related to the attitude of the players. The factors show high significance, which indicates that the five elements of the achievement system are closely related and linked with each other. The common effect will have a positive effect on the attitude of the players. In the meantime, the elements are not isolated but commonly linked. In the period, symbols, social factors have a strong relationship with the attitude of achievement system, which can be understood that the symbolic achievement elements are the explicit achievement elements that players attach importance to. With this, players can have intuitive cognition and experiences as it can be paid more attention to. Social elements allow the players to share or compete with people in the game, which becomes a important kind of motivation for the player's achievements. It is in line with the expression of social comparison theory so that the players can pay attention to the elements [18].

(3) social and reward elements are the most closely related under the relationship between the elements of children's achievement system, which can be explained that players can share their rewards to more players by social methods. Sharing can bring greater satisfaction and the rewards in the competition and challenge environment will also bring a better experience. Knowledge and Reward are closely related. Rewards can constantly incentive players to obtain more knowledge and knowledge is also another form of reward. Players not only hope to have knowledge in the educational game, but also hope to have more reward. Players can have better experiences if learning and rewards can be balanced and it is in line with the concept of internal and external motivation to form motivation together.

Children's DEG achievement system is composed of five elements: "symbol", "reward", "logic", "social" and "knowledge", each component interacts with each other and together has a significant positive effect on the player's attitude, make the game a better user experience and increase motivation. The proposed DEG system for children can effectively enhance the learning experience and improve the quality of learning.

5.2 Research limitations and future research

It is subjective to use interview questionnaires

to collect data. So the future researches will be conducted to improve the reliability and validity of the research conclusions. Due to time and energy, differences in systematic attitudes and preferences for different ages and gender have not been conducted and will be studied deeper in the future. The study on differences in achievement systems across different platforms, different theme types will also continue in subsequent studies.

REFERENCE

[1] Metaari, *2018-2023 Global Game-based Learning Market*. pp. 47, 2018.

[2] L. Galli and P. Fraternali, "Achievement Systems Explained," *Gaming Media and Social Effects-Trends and Applications of Serious Gaming and Social Media*, Vol. 14, No. 3, pp. 25-50, 2014.

[3] R. McDaniel and J. Fanfarelli, "Building Better Digital Badges: Pairing Completion Logic With Psychological Factors," *Simulation & Gaming*, Vol. 47, No. 3, pp. 73-102, 2016.

[4] C. Groening and C. Binnewies, "Achievement Unlocked!"-The Impact of Digital Achievements as a Gamification Element on Motivation and Performance," *Computers in Human Behavior*, Vol. 97, No. 8, pp. 151-166, 2019.

[5] K.E. Rouse, *Gamification in Science Education: The Relationship of Educational Games to Motivation and Achievement*, Pro Quest LLC, Ann Arbor, Michigan, 2013.

[6] Xbox 360 Achievements help boost review scores & sales, https://www.neoseeker.com/news/7241-xbox-360-achievements-help-boost-review-scores-sales/ (accessed October 17, 2007).

[7] B. Anđić, S. Kadić, and R. Grujičić, et al., "A Comparative Analysis of the Attitudes of Primary School Students and Teachers Regarding the Use of Games in Teaching," *IAFOR Journal of Education*, Vol. 6, No. 2, pp. 5-16, 2018.

[8] S. Arnab, T. Lim, and M.B. Carvalho, et al., "Mapping Learning and Game Mechanics for Serious Games Analysis: Mapping Learning and Game Mechanics," *British Journal of Educational Technology,* Vol. 46, No. 2, pp. 391-411, 2015.

[9] P. Wouters, C. Nimwegen, and H. Oostendorp, et al., "A Meta-Analysis of the Cognitive and Motivational Effects of Serious Games," *Journal of Educational Psychology*, Vol. 105, No. 2, pp. 249-265, 2015.

[10] J.P. Gee, "What Video Games Have to Teach Us About Learning and Literacy," *Journal of Literacy & Technology*, Vol. 1, No. 1, pp. 4, 2003.

[11] M.J. Dondlinger, "Educational Video Game Design: A Review of the Literature," *Journal of applied educational technology*, Vol. 4, No. 1, pp. 11, 2007.

[12] B. Erickson and J. Kounios, *The Patient Revolution*, Insight, John Wiley & Sons, Ltd, San Francisco, Calif. 2015.

[13] S. Egenfeldt-Nielsen, "Overview of Research on the Educational Use of Video Games," *Nordic Journal of Digital Literacy*, Vol. 1, No. 1, pp. 184-213, 2006.

[14] L. Galli and P. Fraternali, "Achievement Systems Explained," *Trends and Applications of Serious Gaming and Social Media*, Singapore: Springer Singapore, pp. 25-50, 2014.

[15] J. Hamari and V. Eranti, "Framework for Designing and Evaluating Game Achievements," *Digra Conference: Think Design Play*, pp. 20, 2011.

[16] M. Montola, T. Nummenmaa, and A. Lucero, et al., "Applying Game Achievement Systems to Enhance User Experience in a Photo Sharing Service," *Proceedings of the 13th International MindTrek Conference: Everyday Life in the Ubiquitous Era on - MindTrek '09,* pp. 94,

2009.

[17] H.-B. Ham, "On Simulation for Normalization of Game Satisfaction Density Function," *Journal of Korea Multimedia Society*, Vol. 10, No. 9, pp. 1185-1196, 2007.

[18] G. Richter, D.R. Raban, and S. Rafaeli, "Studying Gamification: The Effect of Rewards and Incentives on Motivation," *Gamification in Education and Business,* pp. 21-46, 2015.

Kun Shi

2019~Currently Dept. of Design & Manufacturing Engineering, Jeonbuk National University, PhD course
2010~2013 Harbin Normal University, Master

Focus areas: Game design, Visual design

Dong-Min Cho

2009~Currently, Dept. of Design & Manufacturing Engineering, Jeonbuk National University, Professor
2008~2009, Sogang University Game Education Institute, full-time lecturer
2004~2006 AAU, San Francisco, USA MFA,
Focus areas: Game design, Visual design